RFCD 202: Introduction to W-CDMA





Technical data is subject to change
Copyright@2003 Agilent Technologies'
Printed on Dec. 4, 2002 5988-8504ENA

This paper examines the core concepts of one operating mode of the IMT-2000 world wide system: 3GPP WCDMA. This system is based on the WCDMA system developed in Japan and Europe. While this standard is a part of the harmonized worldwide standard, it will continue to be developed by the 3GPP standards body that originally developed it. This paper covers the standard as found in the Release 99 version completed in December 1999. A number of features of the 3GPP system have been omitted in the Release 99 standard in order to meet the time schedule. These omitted features, as well as new services, will be added in a second release of the standard to be completed at the end of 2000.

The physical aspects of the air interface are examined as well as enough of the upper protocol layers required to gain a general understanding of the system's operating principles. This paper assumes that the reader has a basic understanding of the principles of direct sequence, spread spectrum communications.

Benefits of 3GPP WCDMA



Higher Capacity - about 2X IS-95, 7X GSM

Ability to Send up to 384 kbps High Speed Data while Moving (Internet, video, multimedia, etc.)

Up to 2 Mbps Throughput for Fixed Applications

5 MHz Bandwidth is more Immune to Fading

No Accurate Base Station Synchronization Needed

Support for Hand-off To and From GSM

The 3GPP system is seen as the next generation replacement for PDC in Japan and for GSM in many parts of the world. 3GPP WCDMA offers much greater capacity for voice relative to either PDC or GSM. In addition, it supports packet data at all of the rates required to meet the IMT-2000 goals. This will allow many next generation applications to come to the markets currently served by GSM and PDC. One unique feature of 3GPP WCDMA is that it requires no special synchronization between cells. Most other direct spread CDMA systems require synchronization to operate (usually relying on GSP satellite timing information to synchronize each cell in the system). 3GPP's unsynchronized nature makes placing base stations in underground subways, inside buildings, and in tunnels much simpler. To aid in the transition from GSM, the 3GPP system provides for handoffs between GSM and 3GPP. Thus, dual mode phones will allow users to freely roam between the large areas covered by GSM and new 3GPP coverage areas.

3GPP Frame Structure

Physical Channels Have a Two Layer Structure:

- Radio frame: 10 ms frame consisting of 15 timeslots
- Timeslot: 667 usec slot consisting of a number of Symbols

Symbols are Defined as:

- One Symbol Consists of a Number of Chips .
- The Number of Chips per Coded Symbol is Equal to the Spread Factor of the Physical Channel
- Chip is a Bit at the Final Spreading Rate of 3.84 Mchips/s

The frame structure for 3GPP is based on the concept of Super frames, which consist of 72, 10 ms radio frames. Each radio frame is further broken down into 15, 667 usec timeslots. Each timeslot is composed of a number of symbols which varies according to the type of service used. A symbol consists of a variable number of chips. The number of chips per symbol is equal to the spreading factor for that channel. For example, a low rate service has 256 chips per symbol which means that the spreading factor is 256 times. A chip, in direct sequence, spread spectrum system is defined as the bit period at the final spreading rate. For the 3GPP system, the final spreading rate is fixed to 3,840,000 chips per second. Thus a chip for the 3GPP system has a period of .26042 micro seconds.

3GPP Timing Options

The 3GPP System has Two Timing Modes:

- Asynchronous Operation - Original Mode
- GPS Synchronized - Added after Harmonization

Asynchronous Mode:

- Eliminates need for GPS Satellite Receivers
- Allows Operation in Tunnels, Buildings, and Subways Where Satellite Reception is Difficult
- Requires Greater Search Time, More Difficult Handoffs

GPS Synchronized Mode:

- Simpler, Faster Searching to Ease Soft Handoffs
- Requires Base Station to Receive GPS Satellite Signals

As mentioned earlier, the 3GPP system operates in an unsynchronized mode. However, after global harmonization, an optional second timing mode was added: GPS synchronized operation. The synchronized mode of operation will allow 3GPP WCDMA to be smoothly implemented in those locations that currently use the TIA/EIA-95B CDMA system (GPS synchronized). The accurate synchronization of the GPS locked mode allows mobiles and base stations to search over short, well known time intervals when acquiring signals. This lowers the processing requirements in the mobile stations and reduces the complexity of soft handoffs. However, to achieve this synchronization, the GPS satellite system (or some other method) must be used as the master timing source. This requires that each base station must have a clear line-of-sight antenna to the GPS satellites. However, when operating the in asynchronous mode, the 3GPP system has no such requirement. This does make system access more difficult and increases search time. Great effort has been applied to the 3GPP system to reduce these effects. The benefits of asynchronous mode are: it eliminates the cost of the GPS receiver, and it eliminates the requirement that the base station be physically located so that GPS satellite reception is possible. The asynchronous mode allows simple installations is such location as tunnels and subways where GPS satellite reception is problematic.

3GPP Protocol Structure

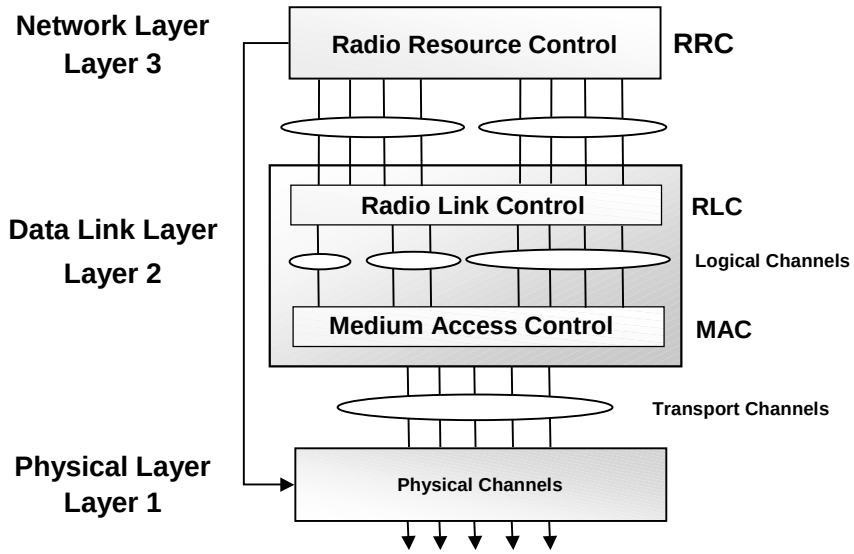

The protocol structure of the 3GPP system closely follows the industry standard 7 layer model. The Network Layer (Layer 3) is responsible for connecting services from the Network to User Equipment. The Radio Resource Control (RRC) block at layer three handles the connection, configuration and release of bearer services and the required corresponding radio resources. The data Link Layer (Layer 2) is composed of two main functional blocks: the Radio Link Control (RLC) and Medium Access Control (MAC) blocks. The RLC block is responsible for: transfer of user data, error correction, flow control, protocol error detection and recovery, and ciphering. The error correction function of the RLC includes such functions as Selective Repeat and Go-Back-N retransmission for lost data. The Ciphering function uses encryption technology to prevent unwanted interception of transmitted data. The MAC function at layer 2 is responsible for mapping between logical channels and transport channels as well as providing the multiplexing/de-multiplexing function of various logical channels efficiently onto the same transport channel. The Physical Layer (Layer 1) maps the transport channels on to the physical channels and performs all of the RF functions necessary to make the system work. These functions includes such operations as: frequency and time synchronization, rate matching, spreading and modulation, power control, and soft handoff.

3GPP Network Support

Designed to Work with Two Networks:

- MAP Network:
  - GSM Network
- ANSI-41 Network:
  - U.S. Standard

Required to Produce a 3G “World Phone”

One of the outcomes of the harmonization efforts was the incorporation of two different network options. These two network options are the MAP network used in many GSM systems, and the ANSI-41 Network commonly used in North America. The dual network option was adopted to allow the future manufacture of “world phones”. The Release 99 version of the standard only supports the MAP network option. A future release will define the ANSI-41 option that will allow future 3GPP phones to roam from Europe or the Far East to the Americas. Given the pressure to rollout the individual systems around the world, the dual network 3GPP phone may not be produced for quite some time.

Transport vs. Physical Channels

- **3GPP Supports the Concept of Multiple Services Sharing a Physical Connection**
- **The Concept of "Transport" Channels is used to Support these Services**
- **Adds an Extra Layer Where Transport Channel are Multiplexed together Prior to Transmission on a Physical Channel**

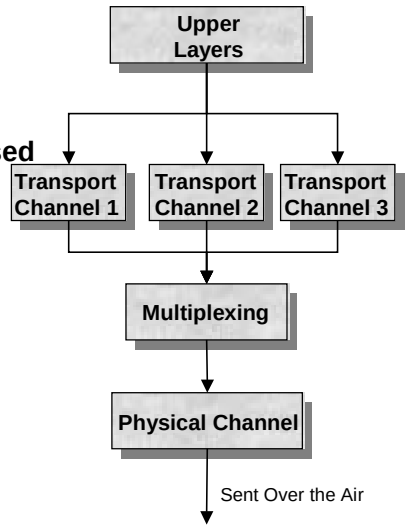

The 3GPP system introduces the concept of "transport" channels to support sharing physical resources between multiple services. Each service, such as data, fax, voice, or signaling are routed into different transport channels by the upper signaling layers. These services may have different data rates and error control mechanisms. These transport channels are then multiplexed as required prior to transmission via one or more physical channels. High data rate services or a combination of lower rates transport channels may be multiplexed into several physical channels. This flexibility allows numerous transport channels (services) of varying data rates to be efficiently allocated to physical channels. By multiplexing these transport channels efficiently, system capacity is optimized. For example, if the aggregate data rate of three transport channels exceeds the maximum of a single physical channel, then the data can be routed to two lower rate physical channels that closely match the total required data rate.

Downlink Physical Channels

CPICH (Common Pilot Channel).

P-CCPCH (Primary Common Control Physical Channel).

S-CCPCH (Secondary Common Control Physical Chan).

SCH (Synchronization Channel).

DPCH (Dedicated Physical Channel).

PDSCH (Physical Downlink Shared Channel).

AICH (Acquisition Indication Channel).

PICH (Page Indication Channel).

The 3GPP downlink is composed of a number of physical channels. The Common Pilot Channel (CPICH) is used as a timing and frequency reference by mobile stations. The Primary Common Control Physical Channel (P-CCPCH) carries a transport channel called the Broadcast Channel (BCH). The BCH carries the system overhead information. The Secondary Common Control Physical Channel (S-CCPCH) can carry the Forward Access Channel or the Paging Channel (FACH or PCH, both of which are transport channels). To aid mobile synchronization to the network, each base station also transmits the Sync Channel (SCH). The main building block of the downlink is the Dedicated Physical Channel (DPCH) that carries the Dedicated Channel (DCH, which is a transport channel). The DPCH is composed of two sub-channels: the Dedicated Physical Data Channel (DPDCH) and the Dedicated Physical Control Channel (DPCCH). Other downlink channels include the Physical Downlink Shared Channel (PDSCH) which can carry information to multiple mobiles at the same time. The Acquisition Indication Channel (AICH) is used to indicate to a mobile that the base station has acquired the mobile's attempt to contact the network. The Page Indication Channel (PICH) informs mobiles when pages directed to that mobile will be sent in an future Paging Channel slot.

Pilot Structure

3GPP Uses Two Types of Pilot Channels:

- Code Based Pilot (CPICH - Common Pilot Channel)
  - Used To Broadcast Timing Information to All Mobile Stations Operating in a Cell or Sector
- Embedded Pilot Signals:
  - Some Downlink Channels also Included Embedded Pilot Information
  - Pilot Data is Time Multiplexed into the Channel
  - Used by Mobiles to Send Timing Information to Base Stations

After harmonization, the 3GPP WCDMA system has adopted two types of pilot channel structures: the code based pilot channel and the embedded pilot channel. In the downlink, the 3GPP system uses a single common pilot channel (CPICH) that is assigned a unique spreading code. This allows all mobiles in that cell to decode the pilot channel and use it as a timing reference. The 3GPP system also uses an embedded pilot in some of the downlink physical channels. The pilot consists of a known pattern of data bits that is multiplexed into the channel's data stream. This known pattern can then be decoded by the receiver and used as an additional timing reference signal. Depending upon the structure of a given physical channel, the number of pilot channel data bits per frame changes. The CPICH allows mobile stations to use coherent detection to increase demodulation performance.

Downlink CPICH

Common Pilot Channels (CPICH):

- Primary CPICH:
  - Modulated with 1+j pattern
  - Always Uses the 256 bit OVSF Spreading Code 0
  - Always Uses the Cell's Primary Scrambling Code
  - One Per Cell and is Broadcast Over the Entire Cell
- Secondary CPICH:
  - Same as the Primary CPICH Except -
  - Assigned Arbitrary 256 bit OVSF Spreading Code
  - Can use the Primary or a Secondary Scrambling Code
  - There can be Any Number of Them

The downlink uses a Common Pilot Channel (CPICH) to send timing information to mobile stations. Mobile stations use the pilot data to maintain synchronization with the base station and as a coherent reference to perform synchronous demodulation. The 3GPP WCDMA system has several types of Common Pilot Channels. Every cell has one and only one Primary CPICH. This channel is unmodulated (1+j pattern on the I and Q channels) and is spread with a 256 bit OVSF code that is fixed: all cells use the same 256 bit code - which is code number 0 (more on OVSF codes in a minute). The Primary CPICH is always scrambled by the base station's primary scrambling code.

A Secondary CPICH is similar to a Primary CPICH except that they are free to be assigned any 256 bit OOVSF spreading code and can use either the primary or any of the secondary scrambling codes for the associated base station. There can be any number of Secondary CPICHs. The primary use of the Secondary CPICH will be in the future when beam formed antennas are implemented. These beam formed antennas will transmit base station signals to individual mobile stations to reduce overall interference levels while maintaining a quality link. Beam formed reception antennas will allow base stations to track the location a mobile to maintain signal quality. In these cases, a secondary CPICH channel is needed so that the mobile station can decode the beam formed signal that is directed to it.

Downlink P-CCPCH

The P-CCPCH (Primary Common Control Physical Channel) Transmits the BCH (Broadcast Channel) Transport Channel.

Sends Cell Information.

Rate Is Fixed to 27 kbps.

Broadcast over the Entire Cell.

The P-CCPCH Does Not Contain Pilot, Power Control, or Rate Information.

Every Cell Uses OVSF Code 1 (256 bit).

The P-CCPCH physical channel carries the BCH transport channel. The BCH transmits cell specific information that mobiles need to communicate with the network. The BCH is always fixed to a data rate of 27 ksps. The P-CCPCH is transmitted to the entire cell or sector. The P-CCPCH is always spread with the same 256 bit OVSF code - which is code 1.

P-CCPCH Frame Structure

Each Frame is 10 milliseconds in Duration.

Each Frame is Divided into 15 Timeslots:

- Data Rate is Fixed to 27,000 bps
- 18 Data symbols are Sent in each Timeslot
- The P-CCPCH Does Not Transmit in the first 66.7 usec

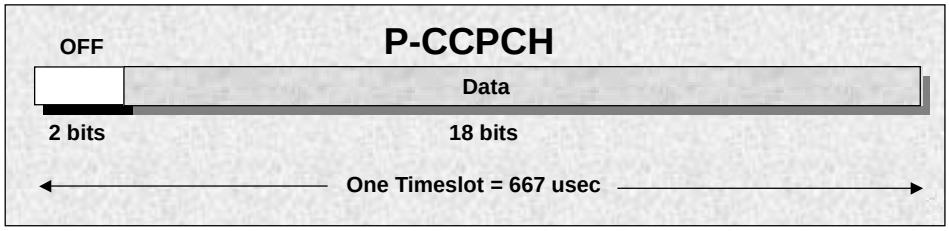

The Primary Common Control Physical Channel uses a fixed, 10 ms frame structure. The framed data rate for the P-CCPCH is fixed to 27,000 bits per second. Each frame of the P-CCPCH is further broken into 15 timeslots of 667 usec. Each timeslot is divided into two sections: an off period where no data is transmitted, and a data portion that carries the BCH information. The P-CCPCH does not send any data in the first 66.7 usec of each timeslot. This is done to reduce the effects of the Sync channel which directly interferes with the other channels in the downlink (more on this in a minute). The data portion of each timeslot carries 18 data bits of the BCH transport channel. This provides a fixed rate of 27,000 bits per second for the BCH.

P-CCPCH Channel Coding

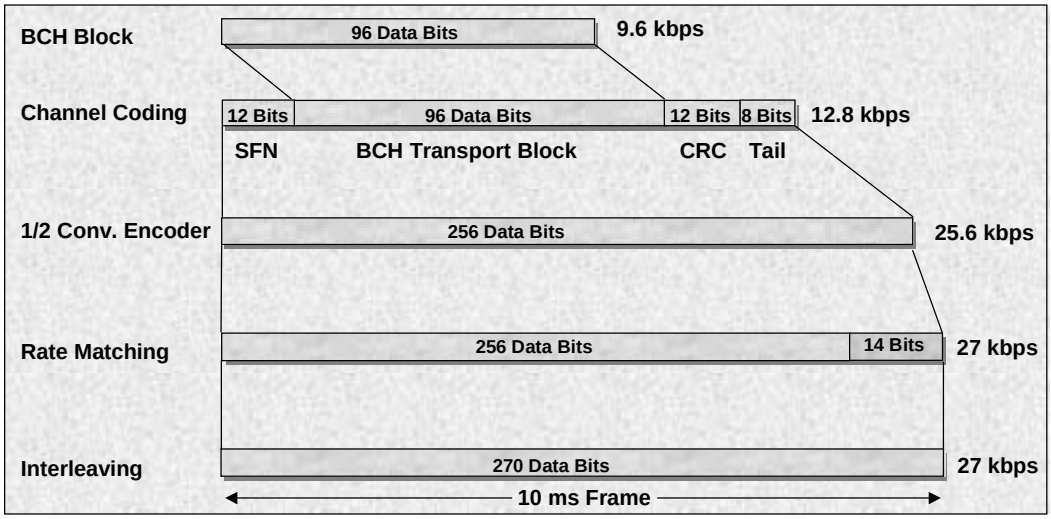

The channel coding of the P-CCPCH begins with a block of data from the BCH transport channel. This block of data carries the actual message portion of the BCH (system information). Several other data blocks are added to the BCH data. First, the System Frame Number (SFN) is carried by 12 bits of data. The SFN is used by the mobile to align data received from various cells during soft handoff. A twelve bit CRC is also added to allow the mobile to verify the received data. Eight tail bits are also added to reset the initial state of the convolutional encoder to all zeroes so as to be ready for the next frame of data. At this point, the combined data is passed through a one-half rate convolutional encoder that doubles the data rate to 25.6 kbps. Rate matching is performed to bring the final rate up to 27 kbps.

Downlink Sync Channel

The *Primary SCH* is:

- An unmodulated, 256 bit Gold Code
- The Code is Sent at the Beginning of each Timeslot
- All Base Station use the Same, 256 bit Gold Code

The *Secondary SCH* is:

- A Sequence of 15, unmodulated, 256 bit Gold Codes
- The Pattern is Sent using the first 256 bits of each Timeslot (15)
- The Pattern of Codes (64 total) correspond to the Scrambling Code (Long Code) Group being used by the Base Station

Both Channels are Orthogonal to Each Other, but are NOT Orthogonal to the Other Channels.

The Synchronization channel is composed of two individual channels: the Primary SCH and Secondary SCH. The purpose of these two channels is to: provide an indentifying signal for each base station, and as a timing reference for each base station. The Primary Sync transmits an unmodulated, 256 bit Gold Code pattern at the 3.84 Mcps rate. The 256 bits are sent once in the first 10% of each timeslot (256 bits at 3.84 Mcps = 66.7 usec, each timeslot is 667 usec). This Gold code is the same for every base station. Mobiles search for this pattern when looking for suitable base stations to use.

The Secondary Sync channel provides a “hint” to the mobile of which scramble code the base station is using. Instead of using a single 256 bit code, the Secondary Sync uses a specific sequence of 15, 256 bit codes in each frame. There are 64 patterns of codes for the Secondary Sync channel. The pattern used by the Secondary Sync channel indicates the scramble code group that the base station is using. In each scramble code group, there are 8 possible scramble codes. Once the mobile reads the Secondary Sync channel and determines the pattern it is using, the mobile then searches for the primary scramble code from the indicated group. It is important to realize that the Primary and Secondary Sync channels are orthogonal to each other, but are not orthogonal to the other channels in the cell.

Sync Frame Structure

Primary Sync: Sends same Code in each Slot

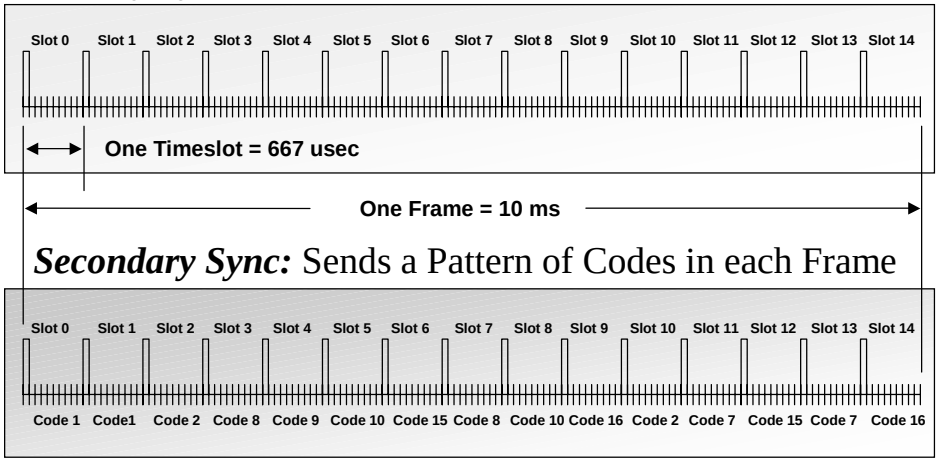

Secondary Sync: Sends a Pattern of Codes in each Frame

This Pattern of 256 bit Codes is Scrambling Group 1

For each 10 ms frame, both the Primary and Secondary Sync channels only transmit in the first 10% of each of the 15 timeslots. The codes sent by these two channels are taken from a set of 256 bit long codes. The Primary Sync channel sends the same 256 bit code in each timeslot. Every base station uses the same 256 bit code for the Primary Sync Channel.

The Secondary Sync channel sends a pattern of 256 bit long codes in each frame taken from a set of 64 code patterns. There are 16 unique codes used to form these 64 code patterns. This pattern is repeated in each frame. In this example, the Secondary Sync channel is sending the Scramble Group 1 pattern. This means that the base station sends the following 256 bit codes in the 15 timeslots of each frame: code 1, 1, 2, 8, 9, 10, 15, 8, 10, 16, 2, 7, 15, 7, 16. Once the mobile reads this pattern, it knows which scramble code group contains the scramble code being used by the cell. The mobile must then search through the 8 scramble codes in this group to find which scramble code (called the primary scramble code) the cell is using. The mobile cannot communicate with the base station until it has identified the exact primary scramble code being used.

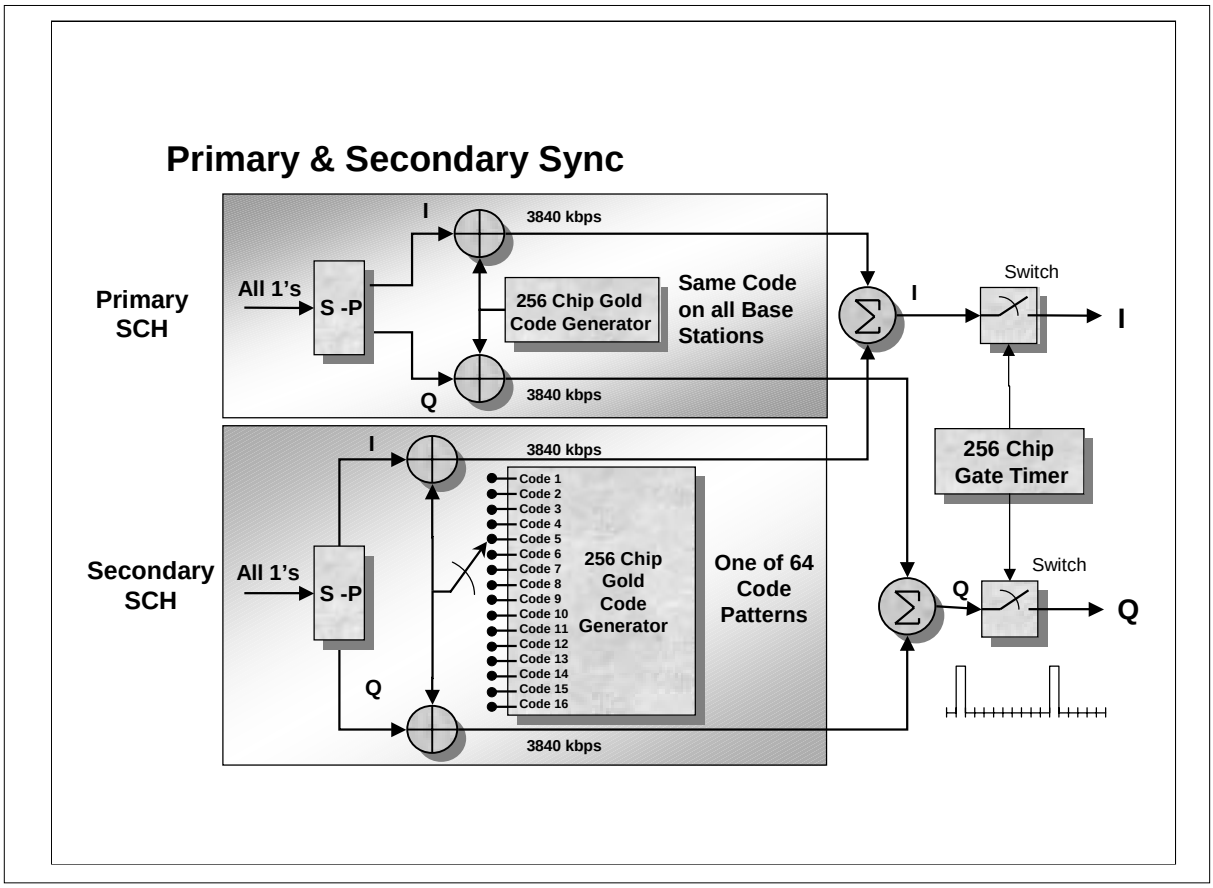

The overall block diagram of the Sync channel shows that the Primary and Secondary Sync channels are summed at I and Q and then transmitted (sent directly to the I/Q modulator) without any further coding. The gating nature of these channels is depicted as an output switch that only connects these signals to the I/Q modulator during the first 256 chips of each timeslot. As shown here, there are 16, 256 bit gold codes that are used for the Secondary Sync Channel. Remember that there are 64 possible patterns of these codes that are sent on the Secondary Sync channel. In each frame, there are only 15 timeslots, so in any one frame, only 15 codes are sent. These 15 codes are selected from the 16 available for each pattern.

Downlink S-CCPCH

The *S-CCPCH* (Secondary Common Control Physical Channel) Sends the *FACH* (Forward Access Channel) and the *PCH* (Paging Channel) Transport Channels.

- The ***FACH*** is Pages Mobiles when Their Location is Known.
- The ***PCH*** is Pages Mobiles when Their Location is *Not Known.*
- The ***FACH*** and ***PCH*** Can be Combined on one SCCPCH or Sent on Separate SCCPCH Channels.

The *S-CCPCH* Has No Power Control Data, but Optionally Carries Rate Information.

The Rate is Fixed in a Cell but Can Be Different between Cells Depending on Cell Loading.

The Secondary Common Control Physical Channel (S-CCPCH) transmits one of two transport channels: the Forward Access Channel (FACH) and the Paging Channel (PCH). The FACH is used to page mobiles when their location is known. The PCH is used to page mobiles when their location in the system is not known. If both transport channels are used in a cell, they can be combined into one S-CCPCH channel or be sent on independent S-CCPCH channels. Like the P-CCPCH, the S-CCPCH has no associated power control data. However, the S-CCPCH can optionally carry rate information (TFCI). In all cases, the framed bit rate of an S-CCPCH is fixed in a cell, but can vary between different cells to accommodate differing levels of loading (number of pages that need to be sent in a cell). One option for the FACH is the use of highly directional transmit antennas to transmit the FACH in a narrow lobe. These beam formed antennas track the location of the receiving mobile station. Using steered, narrow beam antennas reduces the overall level of interference. Reduced interference translates directly into an increase in the cell's capacity.

S-CCPCH Frame Structure

Each Frame is 10 milliseconds in Duration.

Each Frame is Divided into 15 Timeslots:

- Pilot Data is Optional
- TFCI information (Transport Format Combination Indicator) is Optional

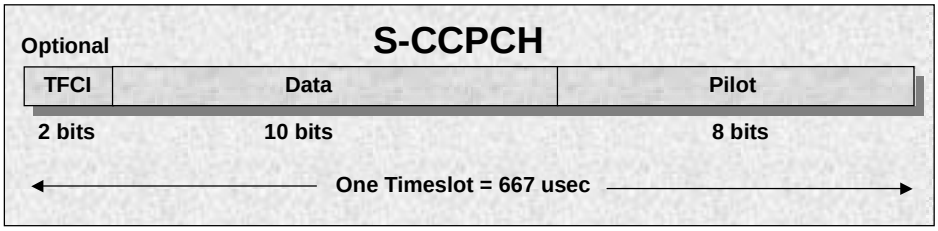

The S-CCPCH frame structure is also based upon 10 ms frames. Unlike the P-CCPCH, the S-CCPCH transmits data continuously in all portions of each timeslot. Optionally, TFCI information can be sent at the beginning of each timeslot. When TFCI is present, the rate of the S-CCPCH is variable. With or without the TFCI, the data rate of the message portion of the S-CCPCH goes from 15 kbps up to 1,844 kbps In this example, the S-CCPCH is running at 30,000 bits per second (message portion at 15 kbps) with 2 bits allocated in each timeslot for the optional TFCI information and 8 bits in each timeslot for the pilot information. The pilot data is also optional on the S-CCPCH.

TFCI Function

Transport Format Combination Indicator **is an Optional Field that Describes the Services in Use.**

The TFCI Message is Ten Bits in Length.

Message Is Reed-Muller Coded (32,10) and Punctured Down to 30,10.

Is Sent as Two Bits per Slot - Equals 30 Bits per Frame.

Allows the Receiver to Perform Explicit Rate Detection.

If Not Used, the Receiver Must Perform Blind Rate Detection.

The optional Transport Format Combination Indicator (TFCI) is used to convey the number of bits in each service for each frame. The TFCI word has ten information bits (per frame). This means that there are a maximum of $2^{10} = 1024$ possible combinations of service and bit rates. The purpose of the TFCI is to help the receiver determine the active services and number of bits in each service. When TFCI is not used, the receiver must “blind detect” the number of services and the bit rate for each. To ensure that the TFCI information is reliably transmitted, additional error correction is applied to the TFCI data prior to transmission. The ten bits of the TFCI word are encoded with Reed-Muller second order coding that increases the length of the TFCI word to 32 bits. Since each timeslot sends two TFCI bits, the coded TFCI information must be punctured down to 30,10 coding. Thus two bits are sent in each of the 15 timeslots to transmit the entire 30 bits in each frame.

Paging Indicator Channel (PICH)

Designed to Increase Battery Life for "Sleep Mode".

Each Phone is Assigned:

- A Paging Slot to Check for Paging Messages on the S-CCPCH (Paging Channel)
- An Associated Paging Indicator Position on the PICH

The PICH is Aligned to Transmit Ahead of the Associated Paging Slot on the S-CCPCH

Mobile Decodes the PICH Channel:

- Active Indicator Tells Mobile that a Page is Coming
- No Indicator Tells Mobile to Return to Sleep Mode without Reading the Paging Channel Slot

To provide the longest possible battery life, 3GPP uses a slotted paging scheme that allows phones to enter a low power "sleep" mode. The mobiles only "wakes-up" from the sleep mode at discrete times (timeslots) to check for a page. The wake up times are negotiated during registration for each mobile. To facilitate this sleep operation, the Paging Indicator Channel (PICH) is used to inform each mobile if there will be a page for it in its next assigned paging slot. The PICH is aligned so that the indicators are transmitted before the associated paging slot on the S-CCPCH.

When a mobiles comes out of sleep mode, it must first decode the paging indicator (PI) on the PICH that is associated with its paging slot to determine if a page is contained in the upcoming page message. If the PI is equal to 1, then the phone must stay awake and decode the Paging channel. If the PI is equal to 0, then the mobile may return to sleep mode until its next assigned paging slot.

PICH Structure

PICH Uses 10 ms Frames

Always is Associated with an S-CCPCH that carries the PCH Transport Channel

300 bits per frame:

- 288 Bits Usable for Paging Indicators
- 12 Bits not Used

Carries a Variable Number of Paging Indicators:

- 18 Indicators per Frame
- 36 Indicators per Frame
- 72 Indicators per Frame
- 144 Indicators per Frame

The PICH uses a 10 ms frame structure. The PICH is always associated with a S-CCPCH that carries its associated PCH transport channel. The PICH transmits data at 30 kbps which means that in each 10 ms frame there are 300 bits. Only the first 288 bits in each frame are used for transmitting Paging Indicators. The last 12 bits of each frame are not used. The PICH can be configured to carry either 18, 36, 72, or 144 Paging Indicators in each frame.

Paging Indicator Timing

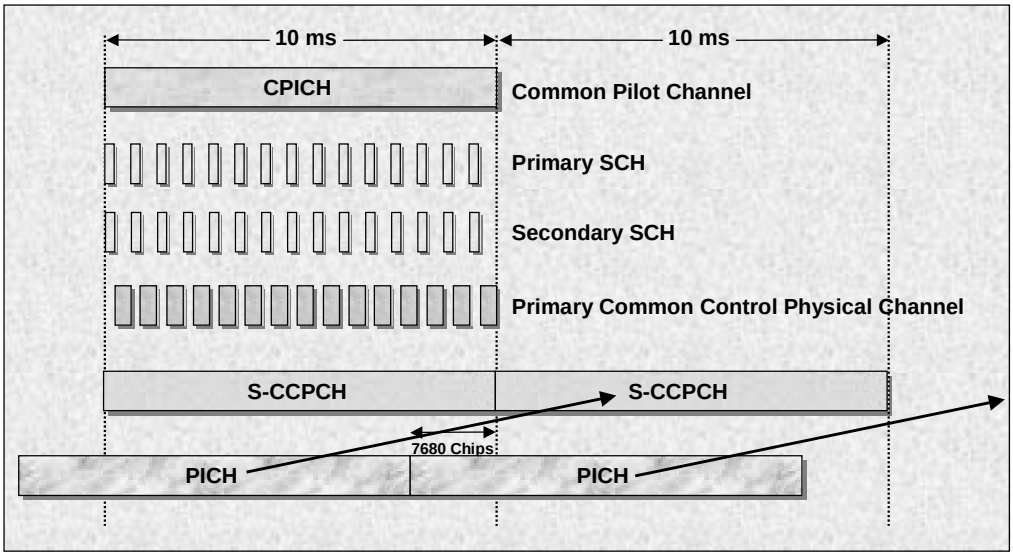

The PICH is transmitted so that all of the Page Indicators are transmitted 1/5th of a frame before the beginning of the associated S-CCPCH that carries the associated Paging Channel. Thus, the end of the PICH frame is 7680 chips from the beginning of the associated S-CCPCH. This allows enough time for the mobile to decode the PICH and determine if it needs to remain awake to decode the S-CCPCH.

Downlink DPCH

The Transport *DCH* (Dedicated Channel) is Carried on the *DPCH* (Dedicated Physical Channel)

The *DPCH* Consists of the *DPDCH* (Dedicated Physical Data Channel) and the *DPCCH* (Dedicated Physical Control Channel).

The *DPDCH* and *DPCCH* are Time Multiplexed together into one Physical Channel.

The *DPDCH* Carries the User Data.

The *DPCCH* Carries the Control Information for the Physical Layer.

The main type of downlink physical channel in the 3GPP system is the Dedicated Physical Channel. The DPCH is composed of the Dedicated Physical Data Channel (DPDCH) and the Dedicated Physical Control Channel (DPCCH). These channels carry the Dedicated transport channel. The DPDCH and the DPCCH are time multiplexed together to form a single channel. The DPDCH carries the user data for one or more services while the DPCCH carries the control information for the physical layer. This control information includes embedded pilot data, transmit power control bits to control the closed loop transmit power of the mobile, and optionally, Transport Format Combination Information (TFCI).

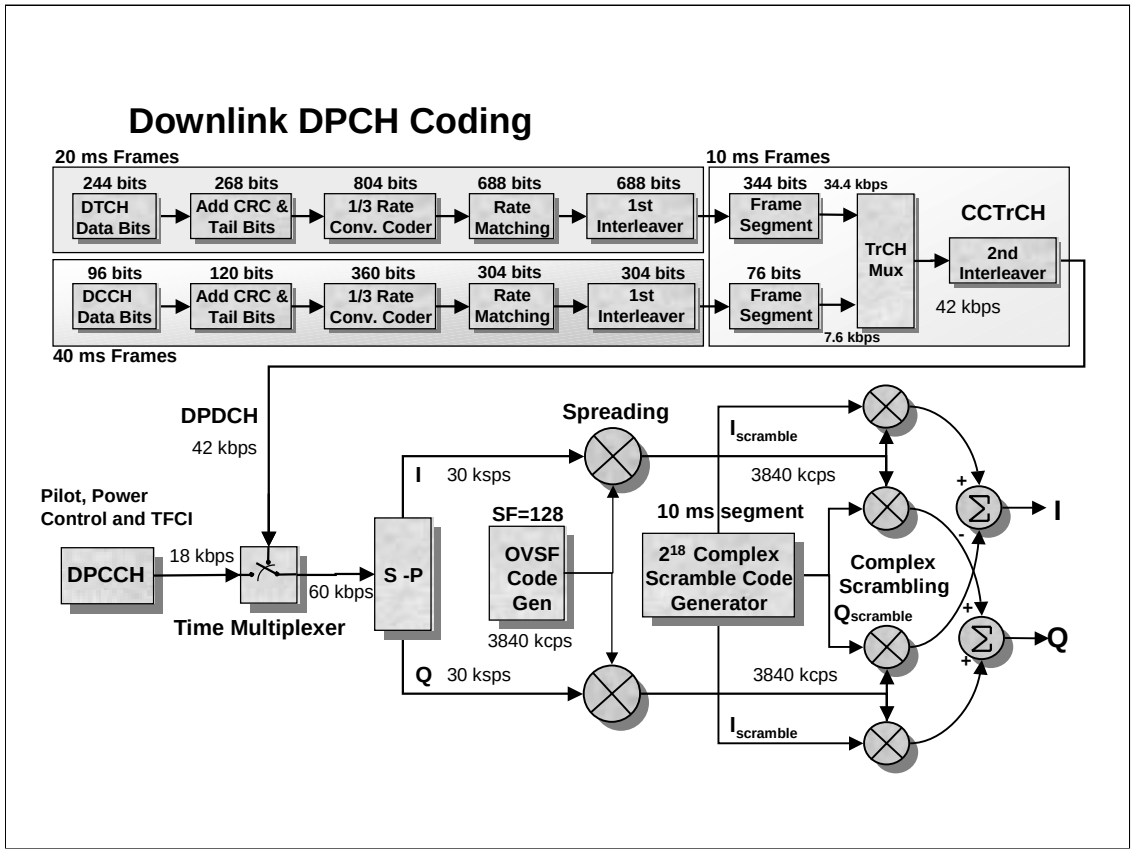

The downlink Dedicated Physical channel (DPCH) is the combination of DPDCH and the DPCCH. In this example, a 12.2 kbps voice service is carried on a DTCH logical channel that uses 20 ms frames. After channel coding, the DTCH is coded with a 1/3 rate convolutional encoder. The data is then punctured down (rate matching) and interleaved. At this point, the DTCH is segmented into 10 ms frames to match the physical channel frame rate. The DCCH logical channel carries a 2.4 kbps data stream on a 40 ms frame structure. The DCCH is coded in the same manner as the DTCH. Frame segmentation for the DCCH involves splitting the data into four, 10 ms segments to match the physical channel frame rate. The DTCH and DCCH are multiplexed together to form the Coded Composite Transport Channel (CCTrCH). The CCTrCH is interleaving and mapped onto a DPDCH running at 42 kbps. The DPCCH carries the control information associated with the physical layer. This data includes Transmit Power Control Data (TPC) for the uplink, Pilot Data for the downlink, and optionally, TFCI data. In this example, the DPCCH has TFCI and is running at a rate of 18 kbps. The DPDCH and DPCCH are time multiplexed together to form a 60 kbps stream. This stream is converted into separate I and Q channels with a symbol rate of 30 ksps for each channel. After spreading to a 3.84 Mcps rate with a 128 bit orthogonal code, the data is scrambled with a complex code that identifies each cell or sector.

Downlink DTCH Channel Coding

Logical Dedicated Traffic Channel

For Speech, the Vocoder Supplies 20 ms Frames

An 16 bit CRC word is added For Bad Frame Detection

8 Tails Bits (all 0's) are added to Flush the Convolutional Encoder

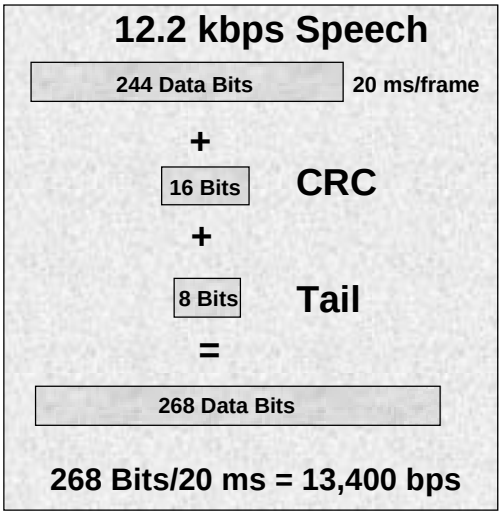

Channel coding in 3GPP includes adding CRC data and tail bits. In this example for 12.2 kbps speech, there are 244 data bits in each 20 ms vocoder frame. A CRC word is added to each voice frame by taking the data bits and running them through a Cyclical Redundancy Check generator. The resulting 16 bit CRC can then be used by the receiver to check for reception errors. If, upon reception, the received data does not produce a CRC that matches the transmitted CRC, the receiver declares that the frame is corrupted (has errors). The tail bits are used to reset the convolutional or turbo encoder to the initial state after each frame of data is processed through the encoder. The 8 tail bits are always set to zeroe and are placed at the end of each frame so that the encoder will be at its initial condition when the next frame is clocked into the encoder. The result of channel encoding is an increase in the data rate from 12.2 kbps to 13.4 kbps.

Downlink Convolutional Encoder

Uses either a 1/2 or 1/3 Rate Coder

Optionally can use no Encoder

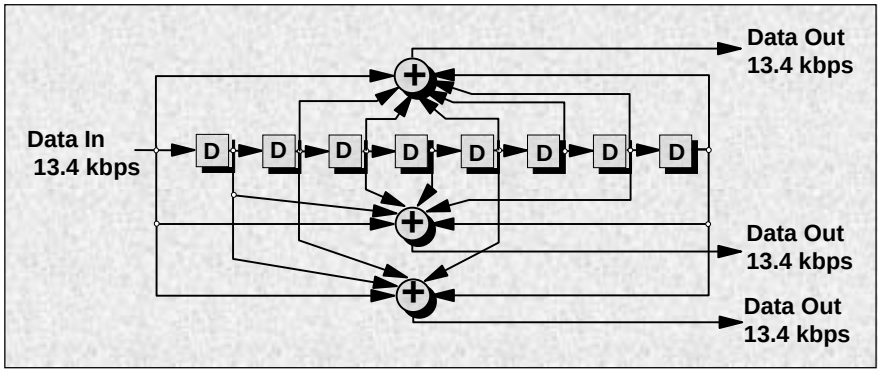

Convolutional encoding is used to provide increased error detection and correction capabilities for the receiver. The BCH, PCH, and FACH use a one half rate convolutional encoder that double the bit rate of the input data stream. The DPCH uses a one third rate or one half rate convolutional encoder for lower rate services and a one third rate turbo encoder for higher data rate services. In this example, a one third rate convolutional encoder is used. The encoder generates three output streams at the same rate as the input data stream. These output streams are multiplexed together to produce a single stream three times as fast as the original data stream. The unique redundancy of the output stream allow efficient Viterbi decoding that can correct many reception errors.

The error correction encoders are feed the input data on a per frame basis. The last eight bits of each frame are the 8 tail bits (all zeroes). Since these are the last bits clocked into the encoder, the state of the 8 “D” flip flops in the encoder are set to zero. Thus, when the next frame of data is clocked into the encoder, it starts out each new frame at the zeroed out condition.

Turbo Coding Option

New Error Correction Codes Have Been Developed That Out Perform Convolutional Encoders for High Rate Data Transmissions: Turbo Codes

Unlike Convolutional Codes, Turbo Codes cannot be Described in Closed Mathematical Form:

- "Trial and Error" Development

Can Yield up to 0.5 dB Performance Improvement in Required S/N



To lower the transmit power required for data transmissions (and thus lower the interference and raise capacity), new error correction and detection encoding schemes have been developed. These encoders are designed to replace the convolutional encoders and have better correction performance while maintaining the same data rate. Turbo encoders are one class of these new encoders. Turbo encoders do not have a closed mathematically description. They must be developed on a trial and error basis. First claims of better performance for Turbo coders than convolutional encoders were met with widespread doubt as mathematicians believed such performance was impossible. Testing has shown that turbo coders do indeed improve the error rate performance of a transmission system. Turbo coders provide a reduction of transmit power up to 0.5 dB for the same error rate performance when compared against convolutional encoders.

Turbo Coder Example

- **Uses the Same Coder for Both Parity Generators**
- **Second Parity Generator Input is Interleaved**
- **Yields 0.5 dB Improvement Relative to Convolution Encoder for High Speed Data**

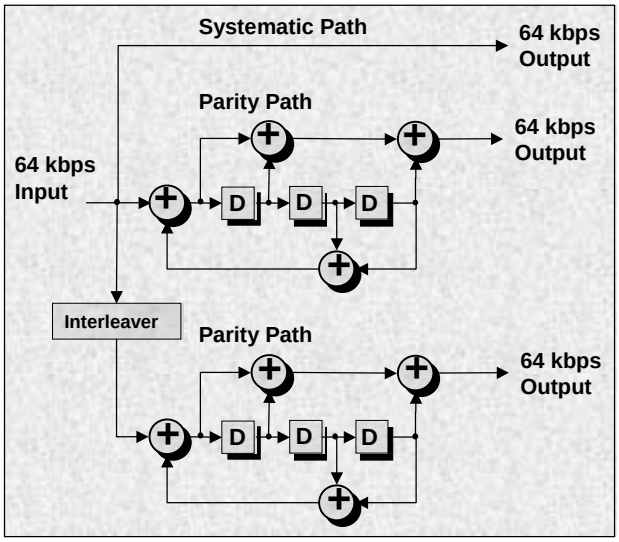

This slide shows the general Turbo Coder specified by 3GPP for high speed data transmissions. Here in this example, data is input to the encoder at a rate of 64 kbps. One path in the Turbo Coder simply sends the original data through to the output without modification. This path is known as the Systematic Path. A second path adds redundancy by clocking the data through a feedback shift register system that modifies the data in a predictable manner. The output of this path is also at a rate 64 kbps. This coded path is called a Parity Path. The third path uses the same coder as the first Parity Path except that the input data is passed through an interleaver. The output of the interleaved Parity Path also runs at 64 kbps. The three resulting data streams are then multiplexed together to form a single stream that runs at three times the original rate. The net result is that the Turbo Coder has 0.5 dB better performance than the convolutional encoder.

Rate Matching

Unequal Repeat or Puncture:

- Data is Punctured to a Lower Rate if: 0.8 < Ratio < 1
- Otherwise the Data is Repeated up to the Next Rate

In this Example, the DTCH Data is Punctured from 804 bits/frame to 688 bits/frame (40,200 bps to 34,400 bps)

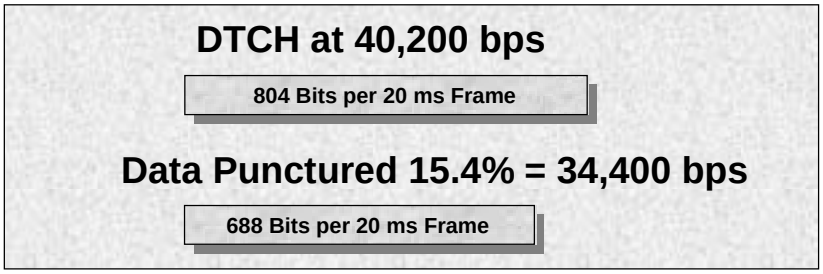

Rate matching in 3GPP is accomplished by unequal repeating of the bits to match the next higher system rate or by puncturing the bits down the next lower system rate. The rules for rate matching are: if the next lower system bit rate is greater than 80% of the input bit rate and less than 100% of the input bit rate, then the input data is punctured. Otherwise, the input data in unequally repeated up to match the nxt higher system rate. The goal is to have the CCTrCH (which may contain several transport channel) match one of the acceptable system symbols rates (after bit to I/Q symbol conversion): 7.5 ksps, 15 ksps, 30 ksps, 60 ksps, 120 ksps, 240 ksps, 480 ksps, and 960 ksps. All services must be rate matched to one of these system symbol rates. In this example, the logical DTCH has a bit rate of 40.2 kbps after convolutional encoding. The logical DCCH has a bit rate of 9 kbps after coding. The DTCH is punctured down to 34.4 kbps because it results in the next lower rate while preserving at least 80% of the original data. The DCCH is also punctured down from 9 kbps to 7.6 kbps in this case. After frame segmenting, the multiplexed DTCH and DCCH sum to form a CCTrCH of 42 kbps. After mapping onto a physical channel, the DPDCH is multiplexed with a DPCCH running at 18 kbps. The result is a 60 kbps stream, which after I/Q symbol mapping, exactly matches one of the available system symbols rates of 30 ksps.

Frame Segmentation & Interleaving

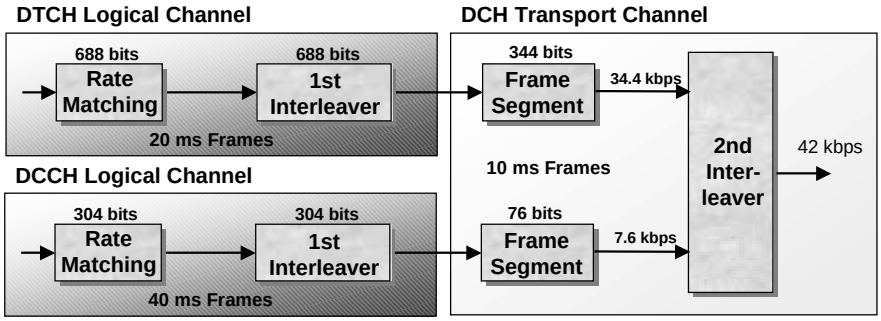

The Logical Channels are:

- Individually Interleaved
- Converted to 10 ms Frame Structures
- Interleaved Together to Form a Dedicated Channel (Transport Channel)

After rate matching, the logical channels are independently interleaved. Once interleaved, each logical channel must be segmented to match the 10 ms frame structure used by the physical layer. In this example, the DTCH is a voice channel that operates with 20 ms frames. Frame segmentation for this logical channel splits each 20 ms frame of data into two 10 ms frames. The DCCH logical channel uses a 40 ms frame structure. Frame segmentation for the DCCH splits each 40 ms frame of data into four 10 ms frames of data. The frame segmentation process results in 10 ms frames for each channel. In this case, the DTCH has a data rate of 34.4 kbps and the DCCH has a data rate of 7.6 kbps. At this point the DTCH and DCCH are interleaved together to form the CCTrCH. The data rate of the CCTrCH is 42 kbps. Other combinations of logical services are possible. This example is just one possibility that illustrates the process.

Downlink DPDCH & DPCCH Time Multiplexing

DPDCH and DPCCH are:

- Time Multiplexed Together each Timeslot
- Power Control Bits are Repeated to Improve Reception
- Power Control Update Rate is 1,500 bps
- This Example is for a 60 kbps DPCH

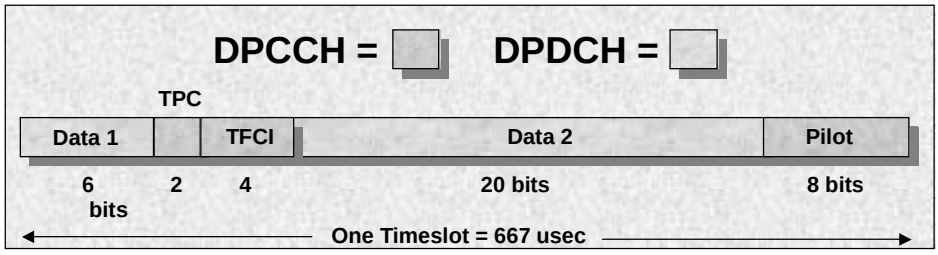

Once the CCTrCH transport channel is built, it must be mapped onto a physical channel. The CCtrCH is mapped into the DPDCH. The physical channel is formed by time multiplexing the DPDCH and DPCCH together each timeslot. In this example, the DPDCH is running at a rate of 42 kbps and the DPCCH is running at a rate of 18 kbps. The two channels are multiplexed such that the TFCI data occupies the first two bits of the timeslot, followed by four DPDCH bits, then two bits of Transmit Power Control (TPC), 24 more bits of DPDCH data, and finally 8 bits of Pilot data. The TPC bits are repeated at least twice per timeslot to improve reception quality. Some timeslot formats transmit four or eight TPC bits. In any case, the update rate of the actual transmit power control commands is always 1500 bps:

2 TPC bits / timeslot = 1 Transmit Power Control Command / timeslot

1 TPCC / timeslot * 15 timeslots / frame * 100 frames / second = 1500 commands per second

Sample Downlink Configurations

Slot Format	DPDCH Bit Rate	DPCCH Bit Rate	TFCI Info ?	DPCH Bit Rate	I/Q Symbol Rate	OVSF Length
0	6 kbps	9 kbps	No	15 kbps	7.5 ksps	512
2	24 kbps	6 kbps	No	30 kbps	15 ksps	256
8	51 kbps	9 kbps	No	60 kbps	30 ksps	128
11	42 kbps	18 kbps	Yes	60 kbps	30 ksps	128
12	90 kbps	30 kbps	Yes	120 kbps	60 ksps	64
13	210 kbps	30 kbps	Yes	240 kbps	120 ksps	32
14	432 kbps	48 kbps	Yes	480 kbps	240 ksps	16
15	912 kbps	48 kbps	Yes	960 kbps	480 ksps	8
16	1872 kbps	48 kbps	Yes	1920 kbps	960 ksps	4

A number of different configurations of the DPDCH and DPCCH are possible in the 3GPP system. The data rates for these combinations vary according to the input rate and the data that is carried on the DPCCH (such as optional TFCI data). This table shows some of the available combinations. The table show the slot format (denoted by a number), the data rate of the DPDCH ***after*** error coding and rate matching, the data rate of the DPCCH, TFCI information, the combined physical channel data rate, the symbol rate after I/Q conversion, and the spread factor (OVSF code length). To achieve higher throughput rates, multiple DPDCHs are used (remember, that the DPDCH rates shown are after error coding and rate matching).

DPDCH & DPCCH Gain

DPDCH **and** *DPCCH* **can Have Independent Gain Settings**

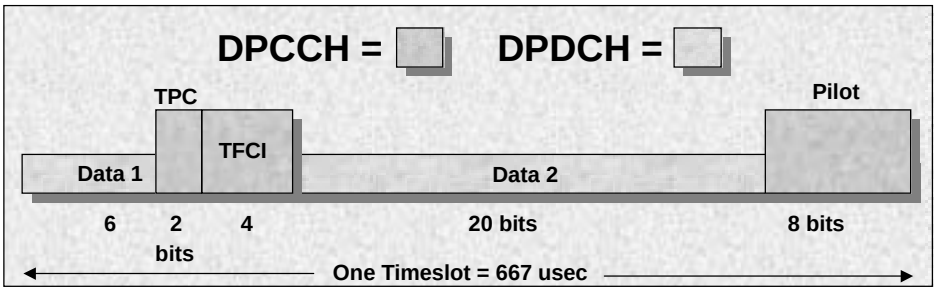

To increase the reliability of the control information, the power of the DPCCH can be adjusted relative to the power of the DPDCH. Reception errors in the TFCI, TPC or Pilot data can have large negative effects on system performance. By raising the power in these symbols, the error rate can be keep to acceptable levels. It is important to remember that the TPC and Pilot data are not convolutionally encoded and so do not have the same robustness as the DPDCH symbols or the TFCI symbols.

Downlink Serial to Parallel Conversion

Time Multiplexed DPDCH/DPCCH Data Stream is Converted into 2 bit Wide Parallel Data (Symbols)

Provides True QPSK Modulation format

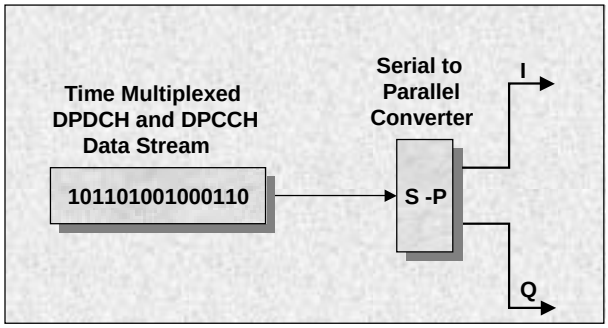

Since the 3GPP system uses true QPSK modulation in the downlink, the data stream is serial to parallel converted after the DPDCH and DPCCH are multiplexed together. The result is two data streams that run at half of the original input data rate. One branch is designated as the I (in phase) channel data stream while the other is designated as the Q (quadrature) channel data stream.

Orthogonal Variable Spreading Factor Codes - OVSF

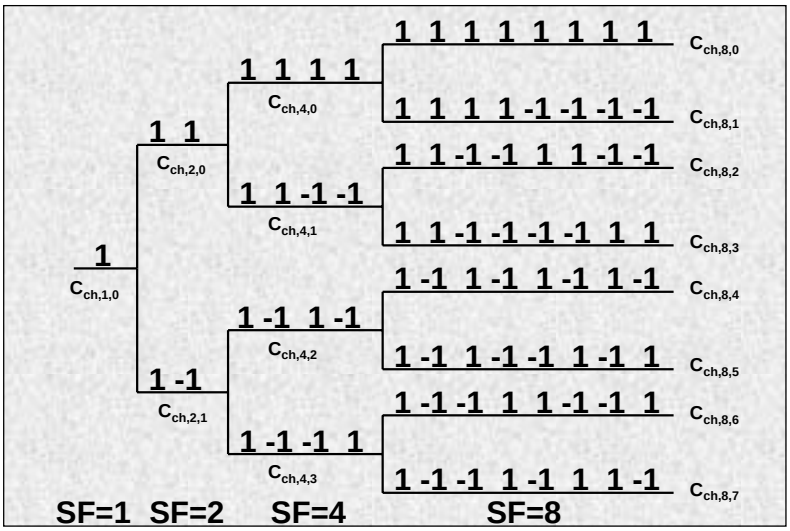

The 3GPP system uses a set of orthogonal codes to uniquely identify each channel in the downlink. In the 3GPP system, this set of codes are known as the Orthogonal Variable Spread Factor (OVSF) codes. The length of the OVSF code is known as the *Spread Factor* (SF) since each channel's data is multiplied by the length of the OVSF code used to spread the channel. This slide shows the code tree that is used to generate the family of OVSF codes. The first code in the tree has one bit which is a digital 1. This code has a SF of 1. The next set of codes with SF=2 is generated by repeating the code from SF=1 for the first code (11) and then inverting the code for the second code (1-1). The process continues down the tree until it reaches SF=512. At the SF=512 point, the set contains 512 unique codes each of which have 512 bits. The 3GPP system accommodates channels with different throughput by spreading them with OVSF codes that have a different SF. High rate channels must use small SF's while low rate channels can use longer SFs. To distinguish these codes various, 3GPP uses a unique labeling system. An OVSF code is first distinguished from other codes in the 3GPP system by the label C_{ch} (Channelization Code). The length of the OVSF code is denoted by adding the Spread Factor: $C_{ch,4}$. Finally, the code number is added to the label: $C_{ch,4,3}$. Thus the code $C_{ch,4,3}$ is an OVSF code used for channelization that has a SF=4 and is the fourth code from that set (1, -1, -1, 1).

Effects of Variable OVSF Codes

Using Shorter OVSF Codes Precludes Using all Longer Codes Derived from the Original

Shorter Codes on a Branch map into Longer Codes

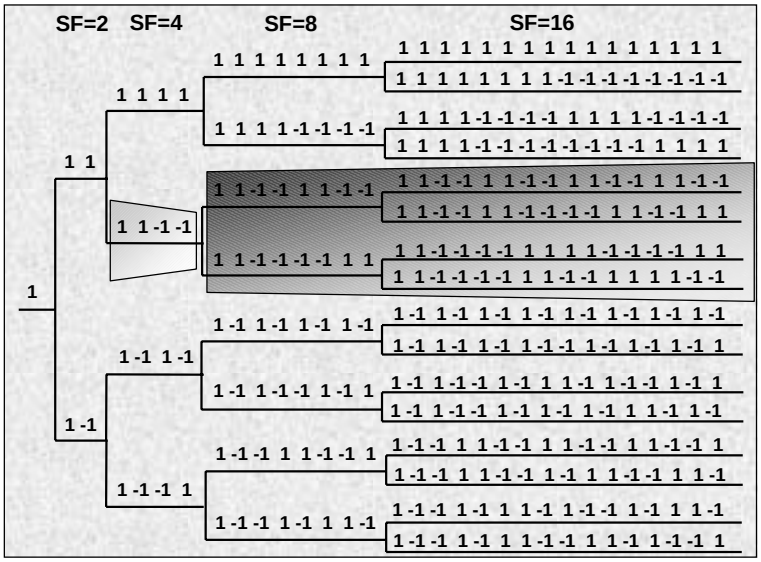

A key point is that every code at a given SF is orthogonal to any other code at the same SF. In addition, codes with a different SF that are not on the same branch are also orthogonal. However, codes that are on the same branch with different SF are NOT orthogonal. The effects of this becomes clear when using high data rate channels (short OVSF codes). If, for example, a channel uses an OVSF with spread factor equal to four, then all OVSF codes derived from that code (on the same branch) cannot be used by the base station. This is because all of the longer OVSF codes on that branch are derived from the parent code (they are NOT orthogonal). In this example, the SF=4 OVSF code is: 1 1 -1 -1. If we compare this code to the first code at the SF=8 level, we find that this code is: 1 1 -1 -1 1 1 -1 -1 (it is simply the SF=4 code repeated twice). If a receiver decodes a channel and receives the 1 1 -1 -1 1 1 -1 -1 bit pattern, there is no way to tell if the modulating data was -1 (SF=8) or -1 -1 (SF=4). This means that a base station must carefully allocate OVSFD codes to assure that all channels remain orthogonal. It also means that as more high rate channels are allocated, the number of available OVSF codes for the system to use is greatly reduced.

Orthogonality of OVSF Codes

Like Walsh Codes Used in IS-95 CDMA, OVSF codes are :

- Orthogonal with each Other and Their Inverses:
  - Orthogonality = Equal Number of Matches and Mismatches

Voice Channels Uses the OVSF Code with a SF (spread factor) of 128

OVSF Codes with SF=8

Code	1	1	1	1	1	1	1	1
Code	1	-1	-1	1	1	-1	-1	1
Match?		Y	N	N	Y	Y	N	N	Y

Matches = 4

Mismatches = 4

Net Correlation = 0

These are essentially the same codes as the Walsh codes used by the IS-95 CDMA system. OVSF codes are orthogonal to each other because they always have a net correlation of zero. For a digital sequence, such as the OVSF codes, a simple test for orthogonality is to compare the number of matches and mismatches (read by columns). Orthogonal codes will have have equal number of matches and mismatches for a net correlation of 0. Orthogonal code sets are always orthogonal to all other codes in the set of the same spread factor and their inverses (1 changed to -1 and -1 to 1). However, as was discussed in the previous slide, orthogonality is not guaranteed for codes of different spread factor.

Downlink Orthogonal Spreading

Uses *OVSF* Codes to Spread the I and Q Channel Data

I and Q Data is Multiplied with *OVSF* Codes

Each I and Q Data Bit Controls the Polarity of the *OVSF* Codes Output by the Multiplier

In This Example, Expands Data Rate by 128 Times

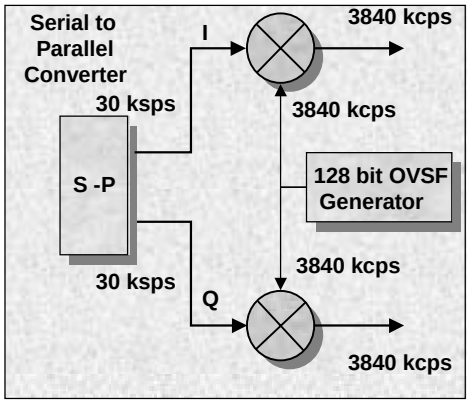

The main bulk of the processing gain in the 3GPP system is provided by the orthogonal spreading function. Here the combined DPDCH and DPCCH data stream is spread from 30 ksps to 3840 kcps (chips per second). In this example, the OVSF codes are 128 bits in length (SF=128). Since the rate increase is also 128 times, each symbol on the I and Q branches acts as a gate signal that passes the OVSF code or its inverse depending on the value of the symbol. If the symbol rate coming into the OVSF spreader was at a higher rate than this example, the SF of the OVSF would have to be reduced to keep the spread output data stream at the required 3.84 Mcps. The CPICH channel is always spread with the first 256 bit OVSF code. This is denoted by $C_{ch,\ 256,0}$ which means channelization code, OVSF of length 256, and code number 0. The P-CCPCH is always spread with the second OVSF code with length 256 bits: $C_{ch,\ 256,1}$. All other channels are assigned OVSF codes by the network.

.

Downlink Scrambling

Each Cell Uses a Different Code

Use a 10 ms segment of a 2^{18}-1 Gold Code (38400 Chips)

Q Code is Offset 131,072 chips

Total Number of Codes =262,143

Use only 8,192 Codes

- **Broken into 512 Sets of Codes**
  - **Each Set has 1 Primary Code with 15 Secondary Codes**
  - **Primary Codes are Further Broken into 64 Code Groups, Each with 8 Primary Codes**

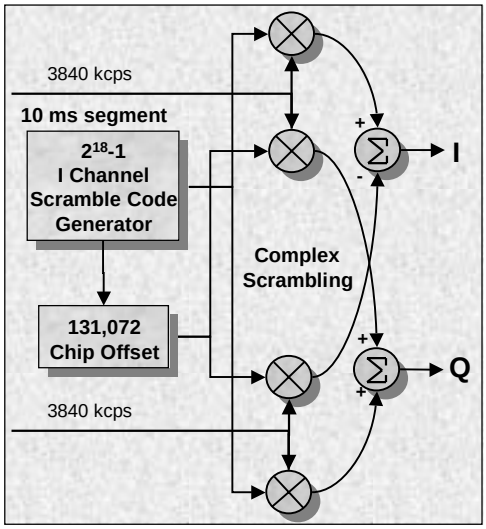

A complex scrambling code is used to "cover" the channels that use the OVSF codes for channelization. Without the scrambling, each adjacent cell would be using the same OVSF codes, which would result in high interference. The complex scrambling code also provides a method to distinguish one base station or sector from another. These complex scrambling codes are 10 ms segments of 2^{18}-1 Gold Codes (38400 chips). The I and Q codes use the same generator but are separated in time by 131,072 chips. This offset produces I and Q sequences that are sufficiently independent to be uncorrelated. There are 262,143 possible scramble codes in the 3GPP WCDMA system. The 262,143 codes are broken into 512 groups. Each group is identified by a Primary code and includes 15 Secondary codes that are associated with that groups' Primary code. Every base station or sector of a base station is assigned one of the Primary scramble codes. The P-CCPCH always uses the Primary scramble code. Optionally, other channels may be scrambled using the Secondary codes associated with the Primary code. The 512 Primary codes are further divided into 64 groups with each group containing having 8 scramble codes. These groups directly correspond to the 64 possible Secondary Sync Channel code patterns. When the mobile determines the Secondary Sync Channel code pattern, the mobile then knows which of the 64 Primary scramble codes groups to search to find the exact Primary scramble code of the base station (8 possible codes).

DL Scramble Code Generator

2^{18} Gold Code Generator Clocked at 3.84 Mcps

- Initial State: Desired Code in Reg. 1 & all 1's into Reg. 2
- Pattern resets after 10 ms (38400 chips)

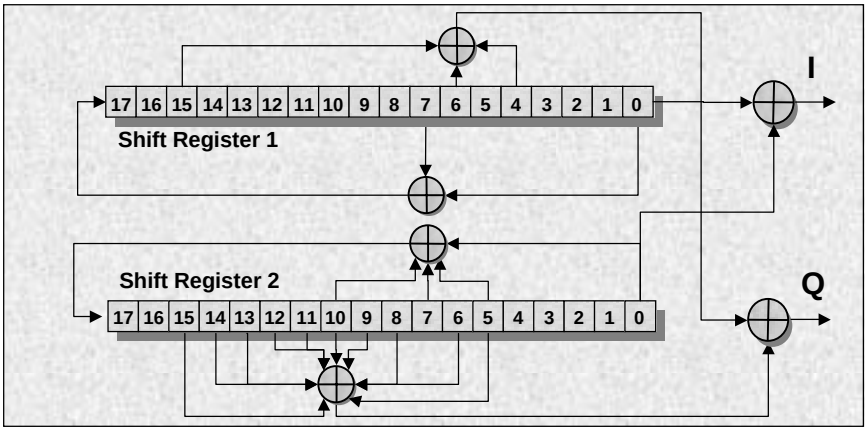

The downlink complex scramble code generator is a 2^{18}-1 Gold Code generator. The complex scramble code generator is clocked at the chip rate of 3.84 Mcps. Gold Code generators have two pseudo random, feedback shift register based on different polynomials. Each feedback shift register has feedback taps at different points. The feedback location indicates a factor in the polynomial: $x^{18} + x^7 + 1$ for the top generator and $x^{18} + x^{10} + x^7 + x^5 + 1$ for the lower generator. The final I channel code is the XOR of the two feedback shift register's outputs. The final Q code is generated by tapping the generators at different locations and then doing a XOR on the two outputs. To start the gold code sequence, the upper generator is loaded with the desired code and the lower generator is loaded with all 1's. After running for 10 ms, the two generators are reset to the initial conditions and restarted. Thus the complex scramble pattern for a given code repeats every 10 ms. The complex scramble code (either the primary or one of the associated secondary codes) is applied to all down link channels except for the Sync channel. Of course, the 512 possible codes must be used in cells spaced far enough apart to preclude interference. This requires some code planning, but present no major obstacle.

Transmit Diversity

Uses Various Types:

- Open Loop Modes -
  - Space Time Transmit Diversity (STTD) - used on most Downlink Channels Except SCH
  - Transmit Switched Time Diversity (TSTD) - used on the SCH
- Closed Loop Modes -
  - Feedback Mode 1 - Mobile Signals to Base to Adjust TX Phase Using Feedback Bits
  - Feedback Mode 2 - Mobile Signals to Base to Adjust TX Phase and Amplitude Using Feedback Bits

The 3GPP WCDMA system has several options for downlink transmit diversity. While optional, support for these functions in mandatory in all mobile stations. There are two main types of downlink transmit diversity: open loop and closed loop. The open loop types supported are Space Time Transmit Diversity (STTD) and Transmit Switched Time Diversity (TSTD). Most downlink channels use the STTD mode while the SCH uses the TSTD mode.

The other type of downlink transmit diversity uses feedback from the mobile station to adjust one of the carriers (STTD) to optimize reception. Feedback mode 1 signals phase adjustments to the base station while mode 2 signals both amplitude and phase adjustments to optimize signal reception.

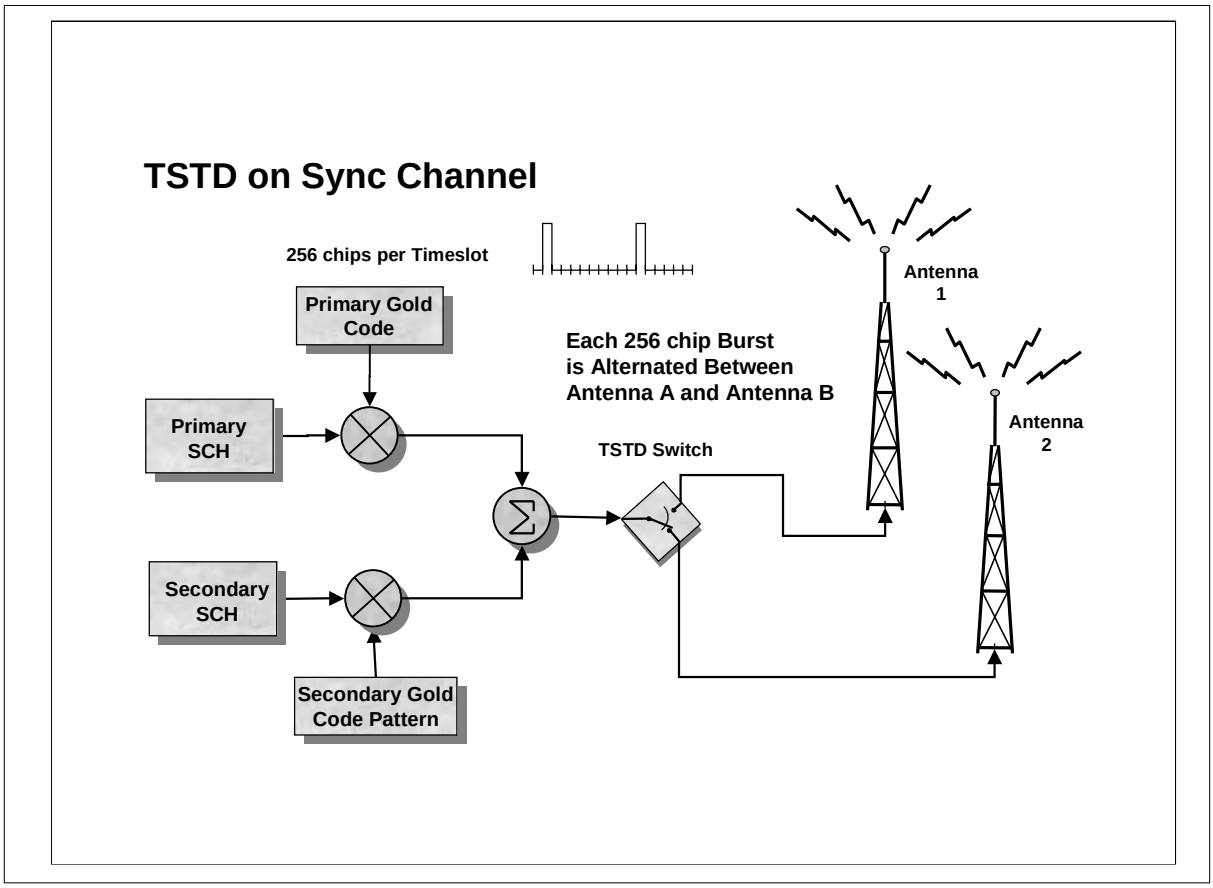

The SCH uses the TSTD form of transmit diversity. In TSTD, the signal of interest is alternately switched between the two antennas. Since the SCH channels are transmitted for only 10% of the beginning of each timeslot, they are repeated 15 times in each frame. Each burst is alternately routed to the two antennas. This aids reception during fading since one of the two paths is likely to be good when the other is experiencing a fade.

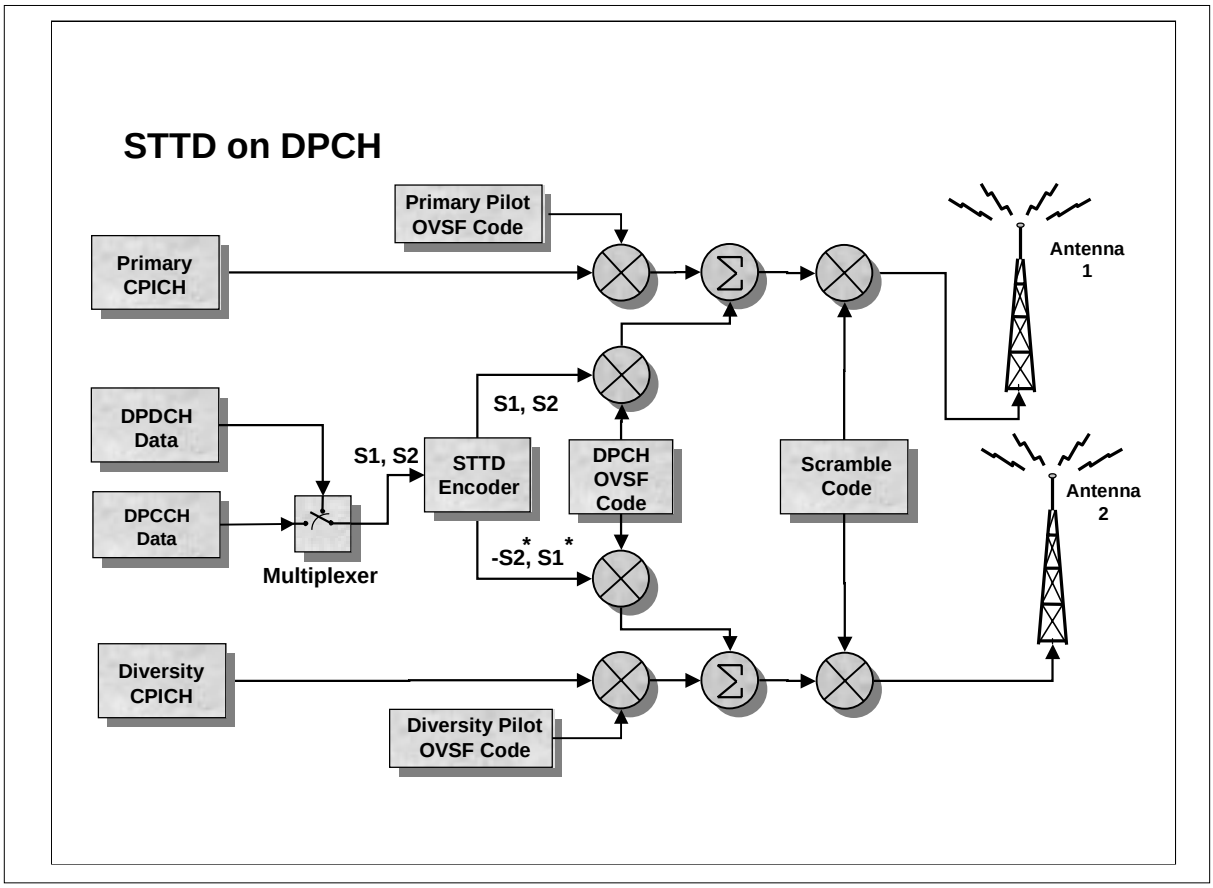

The STTD mode sends the same channel information on two separate antennas to improve reception under fading conditions. In this example, a DPDCH on the downlink uses STTD processing. The DPDCH and the DPCCH are time multiplexed together and then routed to the STTD encoder. The STTD encoder sends the symbol stream unaltered (except for a delay) to the first antenna after OVSF spreading and scrambling. The STTD encoder then sends the symbols to the other antenna in an altered order and inverts one of the symbols. The non-diversity antenna has the CPICH pilot channel summed along with all other base station channels. The diversity antenna must also have a pilot to allow decoding of its signal. A diversity CPICH is added to the diversity antenna for this purpose. Upon reception, if a discrete time fade occurs, the data from the two antennas will be different (since the diversity antenna sends the symbols in different order). This form of interleaving thus aids reception since recovery of the lost symbol can occur on one of the antennas.

SSDT During Soft Handoff

Site Selection Diversity Transmit Power Control **(SSDT) is:**

- An Optional Method to Improve Capacity During Soft Handoff
- Each Base Station is Given a Temporary ID
- Uses Mobile's FBI (Feedback) Bits to Select the Best Base Station to Transmit (Sends Temp ID)
- Mobile Monitors CPICH Strength of all Cells and Sends new ID when Another Base Station Becomes Stronger

Another form of transmit diversity used in the 3GPP WCDMA system during soft handoff conditions is called Site Selection Diversity Transmit Power Control (SSDT). In this case, each base station is assigned a temporary ID. The mobile then measures all nearby base stations and determines which has the best signal. The mobile then selects this base station as the primary transmitter. This information is quickly carried back to the base station using the feedback bits in each timeslot. The primary cell then transmits to the mobile while all other cells turn off their channel directed to that particular mobile station. If the mobile detects that one of the other cells has a better signal, it sends the feedback bits back to select this cell as the new primary transmitter. This is accomplished without higher layers of protocol and so provides an efficient method of reducing interference while preserving the benefits of soft handoff.

Acquisition Indication Channel

AICH **Provides an Indicator to the Mobile that a PRACH or PCPCH from the Mobile has been Detected**

Uses 1.33 ms Access Slots (15 slots per 20ms)

Each Access Slot Provides 16 Access Indicators for 16 Mobiles in the 1.067 ms Transmission Period

No Data is Sent Last 4 Symbols of Each Slot

Uses the Same Physical Channel Structure as DPDCH/DPCCH

The Acquisition Indication Channel (AICH) is used by the base station to signal a mobile that it has received a valid Physical Random Access Channel or a Physical Common Packet Channel transmission from a mobile. When the mobile receives an indication on the AICH in response to a PRACH, it then reads the BCH to determine system properties. The AICH is transmitted in 1.33 msec access slots (5120 chips). Each access slot can carry up to 16 access indicators (AI) allowing the base station to indicate reception of access attempts from 16 different mobile stations. Each of the 16 AI's directly corresponds to one of the 16 signature codes sent by a mobile PRACH or PCPCH .The access indicators are transmitted in the first 1.067 ms of each slot. No data is sent during the last four symbols of each slot. The spreading and modulation of the AICH is very similar to that of the DPDCH/DPCCH .

AICH Timing

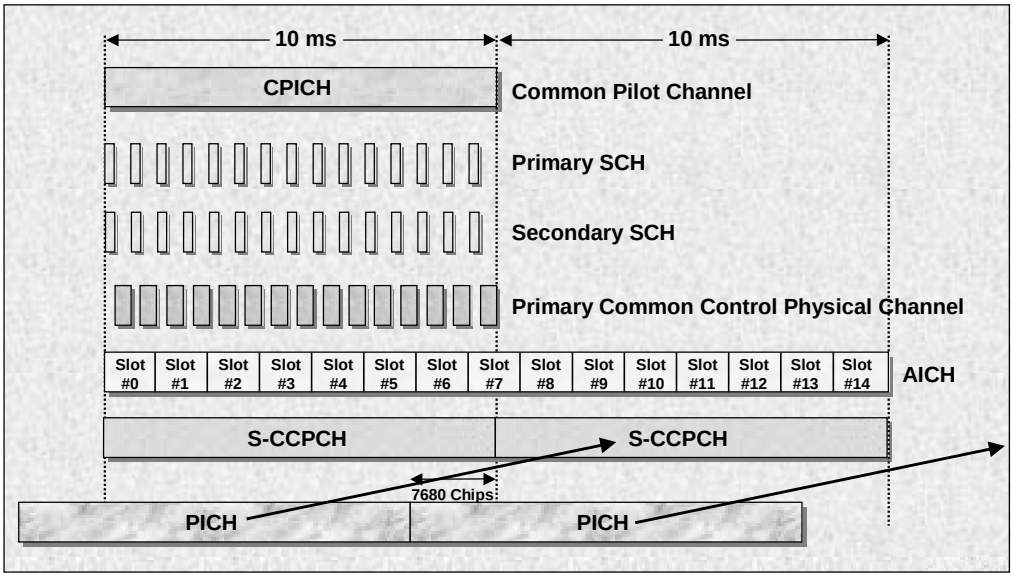

The AICH is time aligned to the frame timing of the P-CCPCH.

Compressed Mode Operation

Downlink Compresses and Bursts the DPDCH/DPCCH

Allows "Off" Reception Times for Mobile to Make Measurements on Other Frequencies

Two Methods:

- Reduce Spread Factor by 2 (Shorter OVSF)
- Puncture Coder (1/3 rate to 1/2 rate)

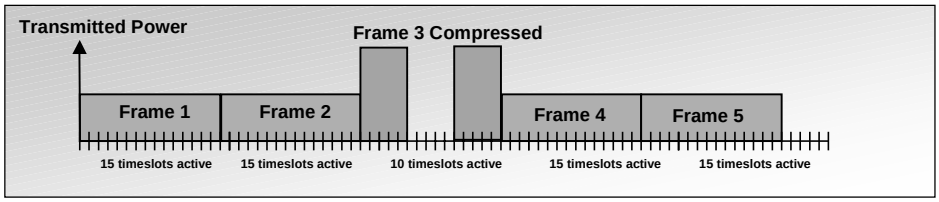

To allow mobiles to have time to measure the signal strength of other frequencies in use in a 3GPP system, a compressed mode of operation is defined. This compressed mode transmits the data in a frame at a faster rate to allow the downlink to temporarily turn off. There are two defined methods for achieving faster transmission: first by reducing the spread factor by 2, and secondly by puncturing the convolutional encoder to a lower rate. In both cases, the data is transmitted in fewer timeslots in a frame. In the first method, the data is spread with a shorter OVSF that reduces the processing gain but increases the channel data rate. In the second technique, the coder is punctured to a lower rate which reduces the number of symbols to be transmitted. In either case, the downlink then transmits the data without using all of the available timeslots. Either method reduces the processing gain applied to the channel. To compensate for the reduced processing gain, the downlink transmits the compressed timeslots with a higher power. During the unused timeslots, the mobile can tune its receiver to another frequency and measure its signal quality.

Physical Uplink Channels

PRACH **(Physical Random Access Channel).**

- Carries the RACH (Random Access Channel)
- Used for System Access

PCPCH **(Physical Common Packet Channel)**

- Carries the CPCH (Common Packet Channel)
- Used to Carry Small to Medium Packets and Support Contention Resolution

DPCH **(Dedicated Physical Channel) Composed of:**

- DPDCH (Dedicated Physical Data Channel).
- DPCCH (Dedicated Physical Control Channel).

The Uplink (transmissions from mobile to base) in the 3GPP system is quite different from the Downlink. There are just three types of physical channels that can be transmitted by mobile station: the Physical Random Access Channel (PRACH), the Physical Common Packet Channel (PCPCH), and the combination of the Dedicated Physical Data Channel (DPDCH) and the Dedicated Physical Control Channel (DPCCH). The PRACH carries the Random Access Channel (RACH), which is a transport channel. The PCPCH carries the Common Packet Channel (CPCH), which is a transport channel. The DCH transport channel is carried by the DPDCH/DPCCH combination.

Uplink PRACH

Sends Signaling Information to the Base Station

Is Composed of Two Parts:

- One or More 1.067 ms Duration Preambles which the Base Station Searches for to Acquire PRACH channels
- A 10 ms Message Section

PRACH uses a Slotted-Aloha Approach:

- Mobile Is Allowed to Transmit in 1.33 ms Access Slots

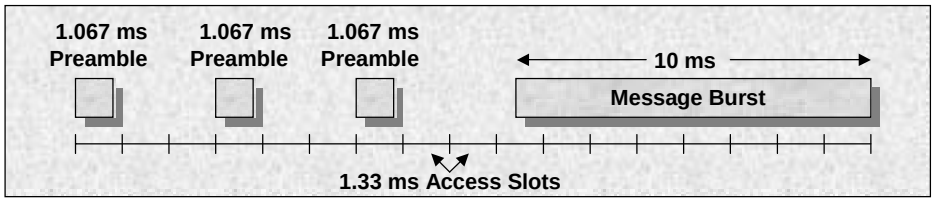

The Uplink PRACH is used to make initial contact with a base station and then to convey signaling messages to the network when the mobile is not on a DPDCH/DPCCH. A PRACH is composed of two distinct parts: a number of preambles and a message portion. The PRACH preambles are 1.067 ms bursts (4096 chips) of a complex signature consisting of 16 symbols that are scrambled with a cell specific, 4096 chip long segment of a 2^{25} Complex Gold Code generator. There are 16 available complex signatures. Adjacent cells must use different scrambling codes to eliminate confusion as to which cell the mobile station is trying to contact. More than one scrambling code may be used by a cell if loading demands it. The preambles are transmitted in predefined access slot of 1.333 ms duration. This means that there are 15 access slots every two frames (15 * 1.33 = 20 ms). The preambles are repeated until the base station acknowledges receiving the preamble on the AICH. Once the mobile receives a reception indication on the AICH, it transmits the message portion of the PRACH. The message portion is 10 ms in length and uses a modulation scheme that is very similar to that of the combined DPDCH/DPCCH. The Physical Common Packet Channel (PCPCH) used a very similar scheme with the exception that a collision resolution preamble is sent once the base station responds on the AICH. A 10 ms power control preamble is then sent followed by the message packet.

PRACH Preamble

Preamble data is 1 of 16 Hadamard Sequences Repeated 256 Times (called a Signature)

Each Signature has a Length of 16 bits

Preamble is Scrambled with a 4096 chip Segment of a 3.84 Mcps Complex Long Code

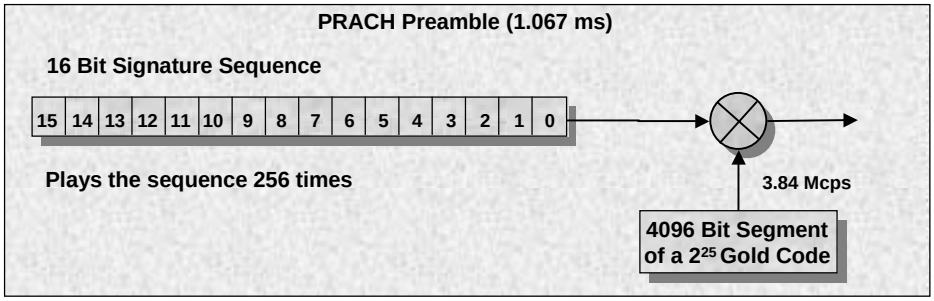

The PRACH signature (modulating data) is a Hadamard sequence with 16 symbols of data. There are 16 possible signature patterns. These patterns are repeated 256 times in every 1.067 ms preamble. All signature codes are orthogonal to each other. The signature data is then scrambled against a 4096 chip long segment of a 2^{25} Complex Gold Code generator. Only the first 4,096 of the possible 16,777,216 possible codes are used (only 2^{24} codes are used). The scrambling code and preamble signature codes run at the 3.84 Mcps rate which means that the signature code is repeated 256 times during the preamble (256 codes * 16 chips/code *0.2604 usec/chip = 1.067 msec) . After scrambling, the data is transmitted using QPSK modulation. The base station transmits which of the 256 scrambling codes should be used for the preambles on the Broadcast Channel.

PRACH Message

Preamble Signature Points to a Node on the OVSF Code Tree at Spread Factor 16

Data Brach is Spread with Upper Branch OVSF:

- Spread Factor is Variable from SF 32 to SF 256)

Control Branch is Spread with Lowest OVSF:

- Always Spread with a 256 Bit OVSF

Scramble Code is a 10 ms Segment of a Complex Gold Code Sequence of Length 25

Uses Scramble Codes 4,096 to 42,495 for PRACH Messages:

- Codes Correspond to the Preamble Spreading Code

The significance of the of the preamble signature is that it provides an aid to the base station in determining what OVSF codes will be used to spread the message portion of the PRACH. Since there are 16 possible signatures, the preamble signature points to a node on the OVSF code tree at SF=16. The message portion of the PRACH is transmitted using the I branch of the modulator for the message data and the Q branch for the control data (pilot bits and TFCI). The I branch (message data) is spread with an OVSF code that is on the upper branch of the OVSF tree at SF=16 that is derived from the node indicated by the preamble signature. The exact spread factor used on the I branch will vary with the data rate transmitted on the message portion of the PRACH. The Q branch is always spread with the SF=256 code that lies at the bottom of the branch of the OVSF tree at SF=16 indicated by the preamble signature. The following slide graphically illustrates this concept.

Following OVSF spreading, the message portion of the PRACH is scrambled with a 10 ms segment of a complex gold code sequence of length 25. Scramble codes 4,096 to 42,495 are used for the message portion of the PRACH and they directly correspond to the scramble codes that spread the preamble portion of the PRACH. These codes are cell specific to prevent interference from adjacent cells.

PRACH OVSF Code Selection

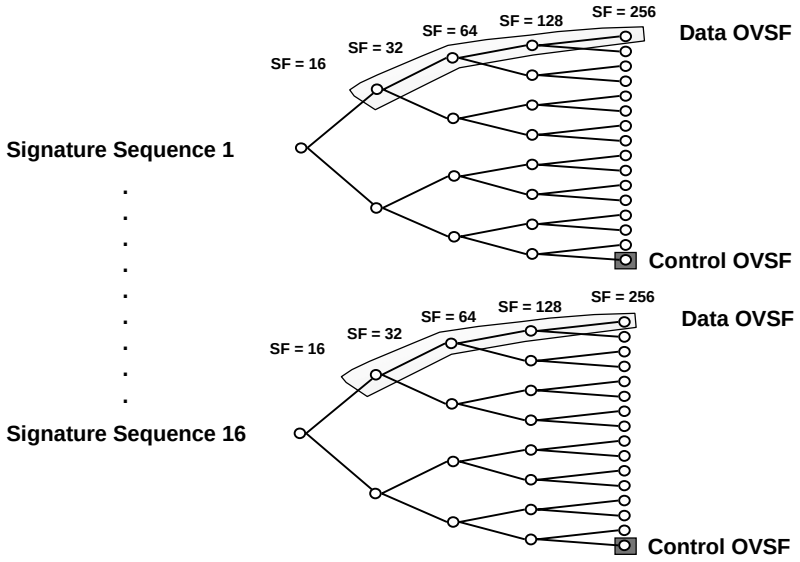

Once the base station determines which of the 16 signature patterns is sent on a PRACH preamble, the base station knows which branch at SF=16 of the OVSF code tree to look within to find the OVSF codes used to spread the message portion of the PRACH. For example, if the base station determines that the mobile is transmitting PRACH preamble with signature 1, then it knows that the I channel branch of the message portion of the PRACH will use one of the OVSF codes on the upper most branch of the code tree at SF=16. In a similar manner the base knows that the Q channel of the message will be spread with the OVSF code at SF=256 that is derived from the first SF=16 node of the code tree.

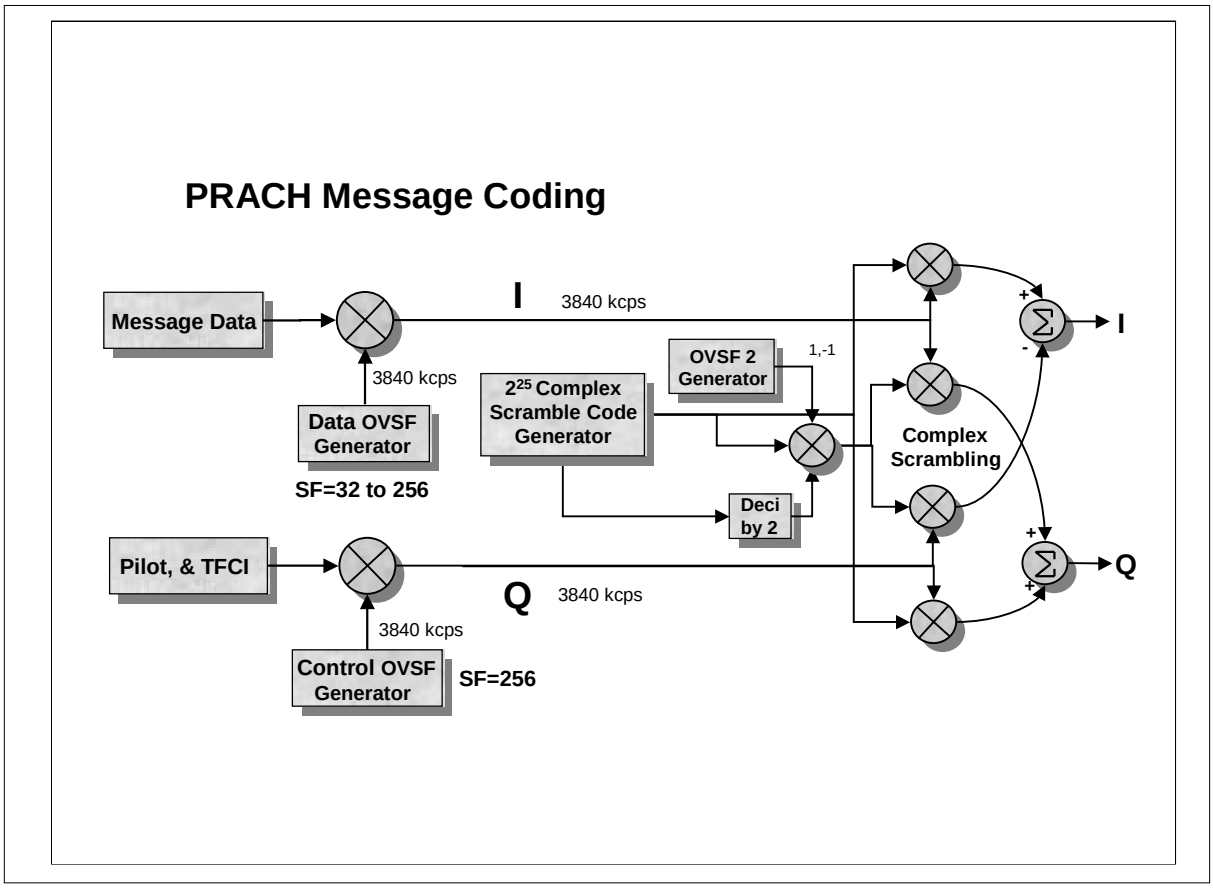

The spreading of the PRACH channel uses the appropriate OVSF for the message portion and spreads the data to the final 3.84 Mcps. This spread data is applied to the I channel path. The control information associated with the physical channel is spread with a 256 bit OVSF to bring the data rate up to the final 3.84 Mcps. The spread control information is applied to the Q channel path. The spread I and Q paths are then scrambled by a mobile station specific long code. This scramble code is based on a 2^{25} length gold code generator with a complex output. The gold code generator is capable of generating 2^{24} unique codes since the MSB of the 2^{25} generator is always set to 1. The scramble code generator is reset every frame to its initial condition to create a unique pattern that lasts one frame. HPSK scrambling is used to lower the peak to average ratio of the modulation. HPSK is explained further in this paper. Scramble codes 4,096 to 42,495 are reserved for the message portion of the PRACH and they have a one to one correspondence with the scrambling code used on the preamble portion of the PRACH. The exact codes are specified by the serving base station. The other available scramble codes are used to uniquely identify DPDCH/DPCCH uplink channels.

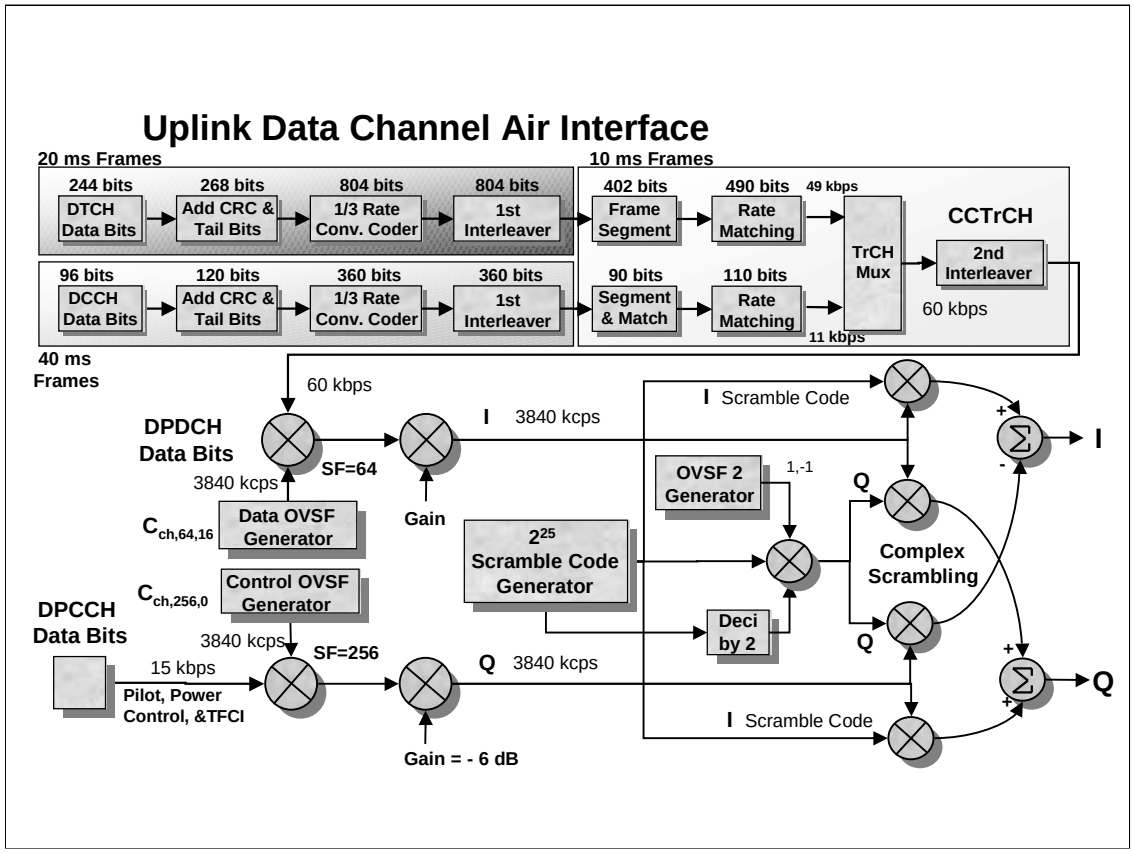

The spreading and scrambling used on the uplink DPDCH/DPCCH differs from the downlink in two key areas: I/Q multiplexing of the DPDCH and the DPCCH, and the use of the scrambling codes as the channelization. In this example, the logical DTCH carries a 12.2 kbps voice channel and the logical DCCH carries a 2.4 kbps signaling channel. Each of these logical channels are channel coded, convolutionaly (or turbo) coded, and interleaved. The DTCH uses 20 msec frames. At the frame segmentation point, the DTCH is split into two parts to conform with the physical layer's 10 ms frame structure. The DCCH, which operates with 40 ms frames, is split into 4 parts so that each signaling frame is spread over four 10 ms radio frames. These channels are then rate matched and multiplexed together prior to spreading. The multiplexed data at this point is called the Coded Composite Transport Channel (CCtrCH). After a second interleaving, the CCTrCH is mapped onto a DPDCH running at 60 kbps. The DPDCH is spread with an OVSF code with spread factor equal to 64 to reach the desired 3.84 Mcps. After gain scaling (to adjust the transmission power for the varying spread factor), the spread DPDCH is applied to the I channel. The DPCCH data is spread with an OVSF code with SF=256 to reach the 3.84 Mcps rate and is gain scaled in this example to be -6 dB relative to the DPDCH. The DPCCH is then applied to the Q channel. The scramble code generator is used to provide the unique channelization required for each mobile station.

Uplink Logical & Transport Channel Processing

Channel Coding:

- Adds 16 bit CRC, 8 Tail Bits

Uses the 1/2 or 1/3 Rate Convolutional or Turbo Encoder

1st Interleave on Individual Logical Channels

Frame Segmentation *(Order is Different than Downlink)*

Rate Matching *(Order is Different than Downlink)*

Transport Channel Multiplexing to form CCTrCH

Second Interleave of CCTrCH

Mapping of CCTrCH onto a Physical Channel

The processing of logical and transport channels in the uplink is very similar to that of the downlink. The channel coding, convolutional or turbo coding, and interleaving processes for the uplink are the same as those in the downlink. The order of the next operations is slightly modified in the uplink. Each transport channel stream is segmented into 10 ms frames and then rate matched. Transport channel streams are them multiplexed to form a Coded Composite Transport Channel (CCTrCH). The CCTrCH is then interleaved and then mapped onto one or more physical channels.

Uplink DPDCH & DPCCH

DPDCH carries the Data

DPCCH carrier the Layer 1 Control Information

Unlike the Downlink, These Channels are I/Q Multiplexed (BPSK Modulation)

For Higher Data Rate Services, Additional DPDCHs are Added to Both the I and Q Branches

Link the downlink, the DPDCH and its associated DPCCH are the primary carriers of data in the uplink. The DPDCH carries the data while the DPCCH carries the layer 1 control information (pilot data, TPC, feedback, and optionally TFCI). Although similar in function to the DPDCH and DPCCH on the downlink, the uplink versions of these channels are coded in a different manner. The DPDCH and DPCCH on the uplink are not time multiplexed together but are code multiplexed onto the I and Q channels. Thus the DPDCH and the DPCCH use BPSK modulation. The resulting complex constellation looks like QPSK since each channel BPSK modulates the I and Q channels respectively. If a service requires data throughput that cannot be handled by a single DPDCH, then additional DPDCHs are code multiplexed onto the I and Q channels.

DPDCH & DPCCH Framing

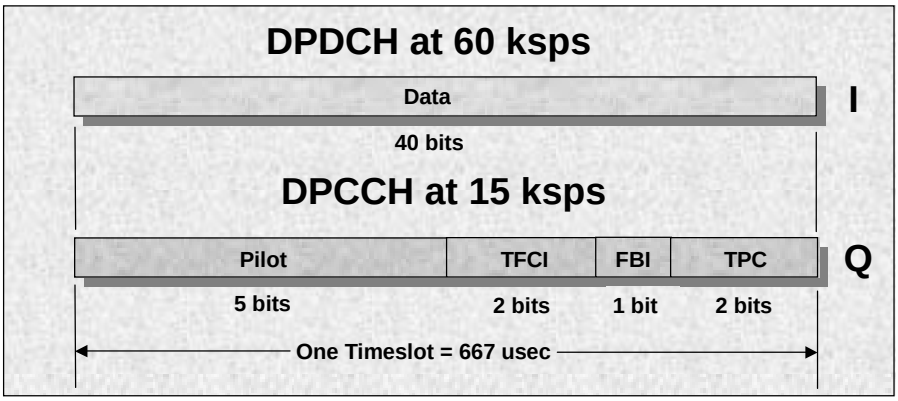

The uplink channels use the same 10ms frame structure with 15 timeslots as found in the downlink. A typical DPDCH running at 60 ksps has 40 data bits in each 667 usec timeslot. A typical configuration for the associated DPCCH runs at 15 ksps with 10 bits in each timeslot. In this example, 5 bits are allocated for the embedded pilot channel, two bits for transmit power control, one for feedback information, and two for the optional TFCI. The feedback bit is used for closed loop transmit diversity or to select the downlink base station when in soft handoff conditions (SSDT - Site Selection Diversity transmission). For closed loop transmit diversity, the feedback bit is used to tell the base station to adjust the phase and/or amplitude of the of two carriers to optimize performance.

Uplink Configurations

Slot Format	DPDCH Bits/Slot	DPDCH Bits/Frame	DPDCH Bit Rate	OVSF Length
0	10	150	15 kbps	256
1	20	300	30 kbps	128
2	40	600	60 kbps	64
3	80	1200	120 kbps	32
4	160	2400	240 kbps	16
5	320	4800	480 kbps	8
6	640	9600	960 kbps	4

DPDCH

Slot Format	DPCCH Bits/Slot	Pilot Bits/Slot	TFCI Bits/Slot	FBI Bits/Slot	TPC Bits/Slot	OVSF Length
0	10	6	2	0	2	256
1	10	8	0	0	2	256
2	10	5	2	1	2	256
3	10	7	0	1	2	256
4	10	6	0	2	2	256
5	10	5	2	2	1	256

DPCCH

A number of different configurations for the uplink DPDCH and DPCCH exist in the 3GPP system. Since the uplink uses essentially independent modulation of the DPDCH and the DPCCH, each channel is optimized for its payload. The DPDCH in the uplink simply carries whatever transport channel data that is mapped to it. Thus the data rates on the DPDCH are simple powers of the base 15 kbps rate. Remember that the data rate of the DPDCH shown in this table is ***after*** error coding, rate matching, and multiplexing of transport channels. Each data rate configuration is identified by a Slot Format number. The SF of the OVSF codes used to spread the DPDCH varies with the data rate to maintain the output chip rate of 3.84 Mcps.

The DPCCH uses a fixed rate of 15 kbps, but the allocation of these bits varies between slot formats. Given its 15 kbps rate, the DPCCH has 10 bits available in each slot. These bits are split between Pilot bits, TFCI bits, Feedback bits (FBI), and Transmit Power Control (TPC) bits. Since the DPCCH has a fixed rate of 15 kbps, it always is spread with a SF=256 OVSF code.

Uplink Gain Values

Each Uplink Channel is Scaled by the factor β

The Maximum Value of β is 1

The Channel with the Highest Power has by Definition β=1.

β is Quantized into four bits (16 levels):

- 1.0, 0.9333, 0.666, 0.8
- 0.7333, 0.6667, 0.6, 0.5333
- 0.4667, 0.4, 0.3333, 0.2667
- 0.2, 0.1333, 0.0667, 0ff

Each uplink channel is scaled by a Gain Factor (β) depending on its processing gain. If the channel is running with a long OVSF (high processing gain), then it can be scaled lower in level. Channels that are sending high speed data (short OVSF spreading code) must be scaled higher to compensate for their reduced processing gain. A channel can be shut off by selecting the lowest β value. The channel with the highest power is always defined to have β =1. All other channels must be scaled with values of $\beta \leq 1$. The gain steps are quantized into four bits of data which yield sixteen discrete gain settings.

Uplink Orthogonal Spreading

The DPDCH & DPCCH are Spread with Different OVSF Codes (independent Channels)

Produces BPSK Spreading on I and Q channels

For Higher Rate Transmissions, Additional DPDCH's can be Modulated on I or Q using Additional OVSK Codes

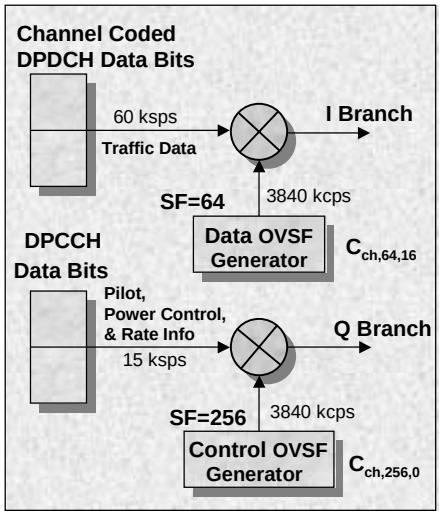

The uplink does not multiplex the DPDCH and DPCCH together like downlink. Rather, each channel is independently spread with different OVSF codes. The DPDCH is assigned to the I channel branch and the DPCCH is assigned to the Q channel branch. This arrangement produces BPSK spreading on the I and on the Q branches (1 bit per symbol). When more DPDCHs are required, these are alternately added to the I and Q branches as needed. The DPCCH is always spread with the first OVSF code of length 256 ($C_{ch,\ 256,0}$). If only one DPDCH is used, then it is assigned the OVSF code that equals the spread factor divided by four. In the case of SF=64, as in this example, the DPDCH is spread with OVSF code number 16 ($C_{ch,\ 64,16}$). If more than one DPDCH is used (multi-code operation for higher rate services), then each are spread with a 4 bit OVSF code ($C_{ch,\ 4,k}$).

Uplink Scrambling

- **Provides Channelization**
- **Not Orthogonal**
- **Uses a 2^{25} Gold Code Generator**
- **Generator is Reset Every 10 ms**
- **Uses HPSK Scrambling to Reduce Crest Factor**

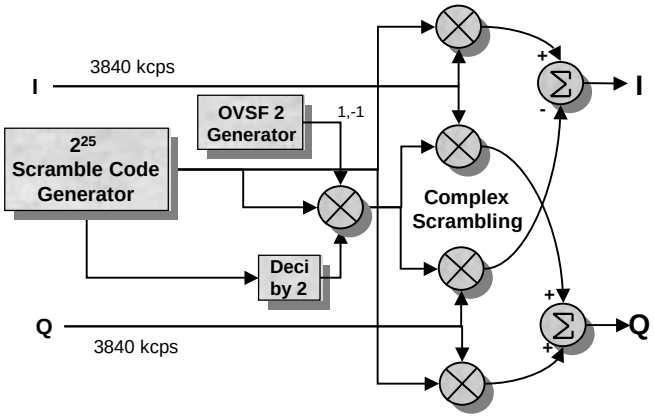

The uplink uses a unique scramble code to identify each mobile's transmissions. Non-orthogonal codes are used for the channelization due to the complexity of time aligning each mobile's signal to achieve orthogonality. The scrambling codes are chosen to provide good interference averaging between users. The scramble code uses a 2^{25} gold code generator. The gold code generator is reset back to the initial condition every 10 ms frame. Thus a mobile repeats the same 38,400 chip long scrambling code every frame. To reduce the peak-to-average ratio of the signal (reduce the crest factor), 3GPP uses Hybrid Phase Shift Keying (HPSK) modulation.

UL Scramble Code Generator

2^{25} Gold Code Generator Clocked at 3.84 Mcps

- Load Desired Code in Lowest 24 Bits of Register 1
- Load all 1's into Register 2, and MSB of Register 1

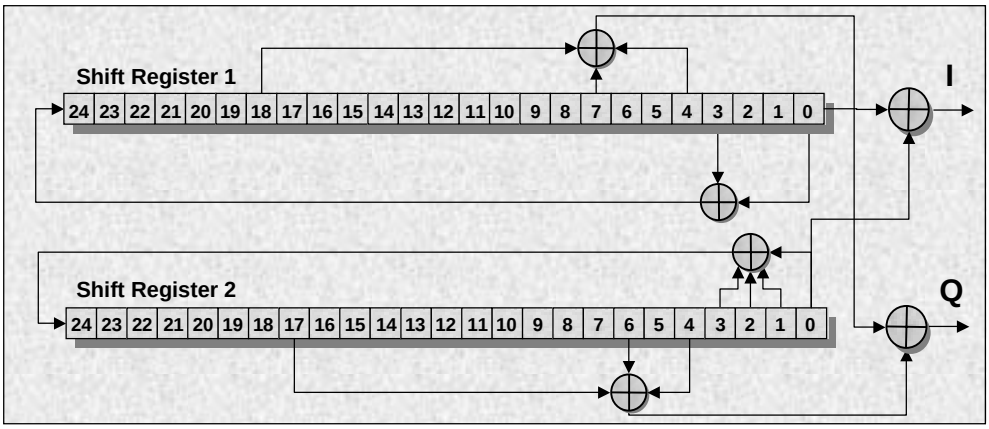

The scramble code on the uplink is generated as a set of Gold codes based upon two pseudo-random number generators of degree 25. To generate these codes, the 24 bits representing the desired code are loaded into the lowest 24 bits of shift register 1. The most significant bit of shift register 1 is always loaded with a 1. The second shift register is loaded with all 1's. Since only 24 of the bits are used in shift register 1 (and since shift register 2 is always started with all 1's), there are 2^{24}= 16,777,215 possible codes for the uplink. The I code is the XOR of the main sequence taps from generator 1 and 2, while the Q code is formed by the XOR of the same two shift registers tapped at different bit locations. The affect of using different taps is that the Q code is the same pattern as the I code but shifted in time by 16,777,232 chips. The generator is then clocked at the system chip rate of 3.84 Mcps. After one frame period (10 ms or 38400 chips), the two shift registers are reset to the initial state. The result is that the scramble code repeats the same pattern every frame.

Why HPSK Works

Idea is to Reduce the Peak to Average Ratio of the Signal

Key is to Decimate the Q Code by 2, followed by XOR with the OVSF Code 1, -1

Reduces the Probability of Zero Transitions and Symbol Repeats from 1/4 to 1/8

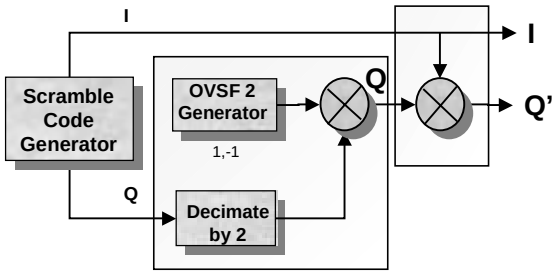

The idea of HPSK is to reduce the peak to average ratio of the modulated signal. If a method can be found that limits simultaneous changes in both I and Q, then the number of zero transitions and symbol repetitions will be reduced. The transitions that result from crossing through the origin and from symbol repetition cause high signal peaks due to filtering induced overshoot. Reducing the number of these transition results in lower signal peaks which reduces the peak to average ratio of the waveform.

This slide shows the essence of the HPSK process. Other operations have been eliminated in this slide to simplify the analysis. The Q scramble code is decimated by two and then spread against the OVSF pattern 1, -1. Since the Q code runs at half the speed of the OVSF code, the output is simply the OVSF code or its inverse depending on the value of the Q signal. At this point, the spread Q signal always changes value every other bit (1, -1, -1, 1, 1, -1,). This signal is then scrambled with the I scramble code to produce the final Q' signal. This action causes the desired condition of only moving I or Q at one time. The next slide shows the result of HPSK.

Result of HPSK Coding

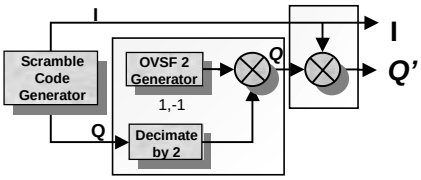

I Possibilities	Q Possibilities	*Q* Patterns	*Q'* Patterns	I/*Q'* Pairs
1, 1	1	1, -1	1, -1	1, 1 ; 1, -1
	-1	-1, 1	-1, 1	1, 1 ; -1, 1
-1, -1	1	1, -1	-1, 1	-1, -1 ; -1, 1
	-1	-1, 1	1, -1	-1, 1 ; -1, -1
1, -1	1	1, -1	1, 1	1, 1 ; -1, 1
	-1	-1, 1	-1, -1	1, -1 ; -1, -1
-1, 1	1	1, -1	-1, -1	-1, -1 ; 1, -1
	-1	-1, 1	1, 1	-1, 1 ; 1, 1

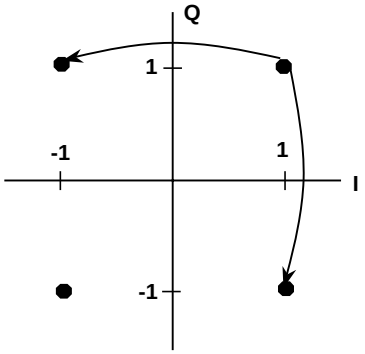

In Each Symbol Change, Zero Crossings and Symbol Repeats Are NOT Allowed !

Next Two Bit Pair Has a 1/4 Chance of Zero Crossing or Symbol Repeat

This slide shows the possible combination of the I and Q' scramble codes after HPSK processing. The easiest method to analyze HPSK , is to examine the possibilities in groups of two bits. The first column in the table shows all four of the possible I scramble code patterns. For each pair of bits, the Q scramble code after OVSF spreading will always be either 1, -1, or -1, 1. The second column shows these two Q pattern possibilities. The third column then shows the final Q' patterns for both Q cases after multiplying them by the I pattern. The final column shows the I/Q pairs that can result. If you analyze the transitions for each case, you will find that zero crossings and symbol repetitions are not allowed (to achieve minimum overshoot). As you can see, either only I or Q changes which produces the minimum energy change.

However, on the boundary with the next two bit group, zero crossings or symbol repetitions can occur. In this case, a zero crossing or symbol repetition with random data has a one out of four probability. Thus HPSK eliminates the zero crossings and symbol repetitions for every other symbol change.

HPSK OVSF Code Requirements

To Preserve the Benefits of HPSK:

- OVSF Codes Must be Used that Do NOT Have Single Bit Value Changes
- Examples that Meet Criteria:
  - 1, 1, 1, 1, -1, -1, -1, -1
  - 1, 1, -1, -1
- Examples that Do NOT Meet Criteria:
  - 1, -1

In order to preserve the reduction in zero crossings and reduced peaks provided by HPSK, the OVSF codes selected for the various mobile channels must have certain bit patterns. The basic requirement is that the OVSF codes must have patterns that repeat bits at least twice before changing value. For example, the OVSF code 1, 1, -1, -1 works since it repeats values twice before changing. This repetition preserves the benefits of HPSK.

Uplink Short Code Scrambler

Optionally, Short Codes can Replace the Long Codes

Enables Joint Detection in the Base Station

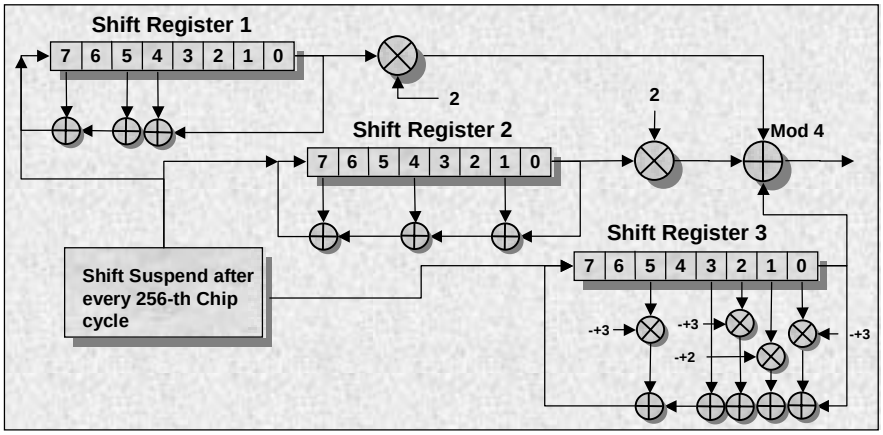

An alternative approach is to use short uplink scrambling codes instead of the long uplink scrambling codes. These codes are used when the base station is equipped with a joint detection receiver. These codes are designed to provide more stable cross correlation properties between individual mobiles on the uplink than the long scramble codes provide. These codes are 256 chips in length. The initial state of the three shift registers is the same 24 bit code word defined as the initial state of the long scramble code generator. Shift register 1 uses the 8 most significant bits of the 24 bit code word and shift register 2 uses the middle 8 bit of the 24 bit code word. Shift register 3 uses the least 8 significant bits of the 24 bit code word which are then transformed into a different 8 bits by multiplying the value by two and then performing modulo 4 division.

Joint Detection

Uplink Link is Non-Orthogonal Which Increases Interference

Joint Detection:

- Base Station Decodes All Possible Channels for That Cell
- Base Station Then Subtracts Interference from All Users Other Than the Desired Channel

Reduces Interference and Raises System Capacity

Very High Computing Power Required

The idea with using the short scramble codes is to allow joint detection at the base station. Since the uplink mobiles all interfere with each other, a method to increase capacity is to somehow cancel out the power from all other mobiles except for the one being decoded. Joint detection is a method to perform such interference cancellation. The idea is to simultaneously detect all mobile signals in the base station and then subtract the energy of all of the unwanted channels when decoding a given channel. The short scramble codes are designed to have relatively stable cross correlation properties to enable this interference cancellation. As you can imagine, joint detection requires massive processing power. The benefit for this high hardware cost is increased capacity on the uplink (which is usually the limiting factor in system total capacity).

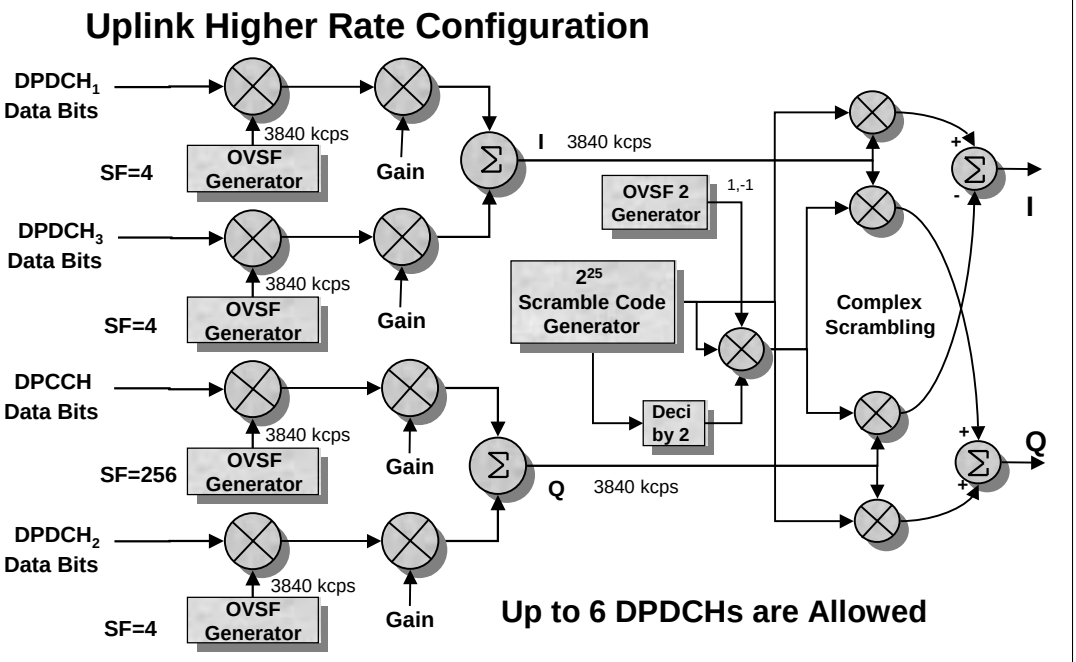

If the total data rate of the transport channels in use exceeds the capacity of a single DPDCH, then additional DPDCHs can be added to accommodate the required data rate. These additional DPDCHs are allocated to the I and Q branches so as to balance the loaded on each branch. The maximum number of DPDCHs allowed on a single mobile is 6. If more than one DPDCHs are used, then all DPDCHs use a OVSF code with its spread factor equal to 4. At first this seems impossible, since up to 6 DPDCHs are allowed and at SF=4 there are only four codes. However, since these 6 channels are alternately placed on the I or Q branches (remember the I and Q channels are orthogonal), the OVSF codes can be reused on I and Q without creating interference. A single DPCCH is used no matter how many DPDCHs may be in use. Of course, adding many high data rate channels will quickly consume the total capacity of the uplink.

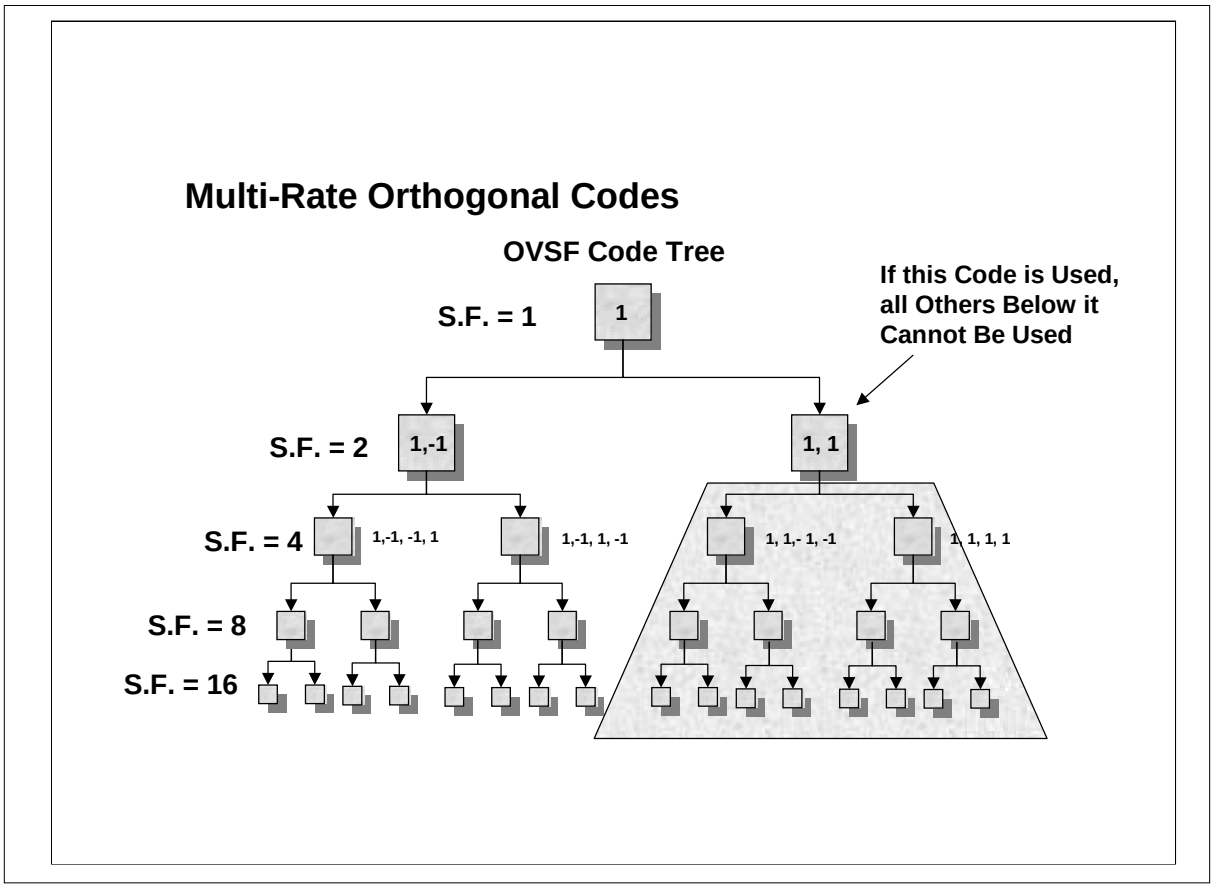

The uplink is also subject to the limitations of usable OVSF codes as the Spread Factor is changed. If a very high rate DPDCH is operating, then the higher S.F. OVSF codes lower on the code code on that branch cannot be used. Remember that a further constraint is that OVSF codes with alternating bit patterns cannot be used since they remove the benefits of HPSK modulation. Fortunately, in most cases there are sufficient OVSF codes to handle multiple DPDCHs.

Call Processing

Mobile Synchronization

Read Broadcast Channel

Mobile Initial Access:

- Base Station Page, Mobile Response
- Mobile Initiated Call

Move to DPDCH/DPCCH

Soft Handoff

To assist understanding of how the 3GPP system will function in actual use, the final section of this paper walks through a number of common systems procedures. This will include mobile synchronization, reading system parameters, initial mobile network access, DPDCH/DPCCH assignment, and soft handoff.

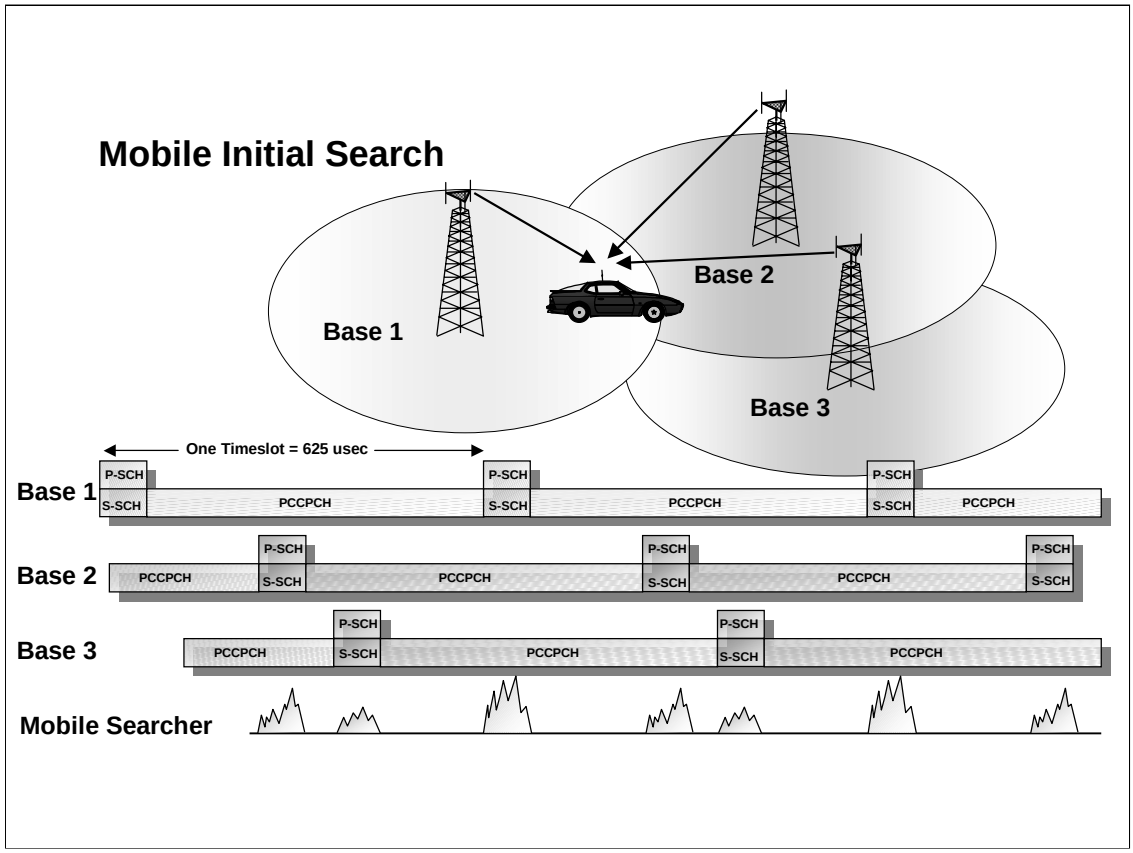

When a 3GPP mobile is powered on, it must find and synchronize to the most appropriate base station before it can receive pages or place mobile initiated calls. The first task for the mobile is to find all receivable primary SCH channels. At this point the mobile station has no timing reference at all. The mobile searches for the Primary Sync channel code which is transmitted during the first 10% of each timeslot. Since the 3GPP system is completely unsynchronized, the Primary SCH signal from each base station will be received at arbitrary time offsets. Once all of the receivable primary SCHs have been located, the mobile selects the strongest assuming that it probably is the closest base station. In this example, the mobile would select Base Station 1 since it provides the strongest signal.

Mobile Synchronization

Find and Time Sync to Primary SCH Chip Rate

Find and Decode Secondary SCH

- Determine Which of the 64 Possible Code Patterns the Secondary SCH is Sending

Begin Search for which of the 8 Possible Scrambling Codes the Base Station is Using Within the Code Group Defined by the Secondary SCH

Once the strongest cell is selected, the mobile time synchronizes to the primary SCH to align to the 3.84 Mcps chip rate and the 10 ms frame clock. Once this basic timing is established, the mobile can then search for the secondary SCH. To find the secondary SCH, the mobile must find which of the 64 possible code patterns the secondary SCH is transmitting. Once the pattern is found, the mobile can begin the search process to find which of the 8 possible scrambling codes the base station is using. Remember that the secondary SCH code pattern reduces the search down to the 8 scrambling codes that are associated with the secondary SCH code pattern. The mobile station searches for this scrambling code on the Primary C-CPICH that carries the BCH (Broadcast Channel).

Read Broadcast Channel

Once Scrambling Code is Determined, Decode the Broadcast Channel (BCH)

BCH Messages Provide System Specific Information and Cell Parameters Required for Proper Operation

Cell May Require Registration

Once Complete, Mobile Enters Sleep Mode

Reads PICH to Determine if it Needs to Read PCH

Monitors the PCH or FACH for Page

At this point, once the mobile has found the scrambling code, it can begin to decode channels from that base station. The mobile uses this timing information to decode the BCH. The BCH transmits the system specific information and cell specific information needed by the mobile to successfully access the system. For example, some of this information includes which signature and scramble code to use for the PRACH preamble, the scramble code to use for the PRACH message, and the timing of the access slots. The BCH may also indicate if the mobile needs to register with the network. After registration, the mobile then enters sleep mode to conserve battery life. In sleep mode, the mobile station powers down its receiver until specific times when a page from the base station for that mobile will occur. Just before the next active slot for a given mobile, the mobile first reads the PICH (Page Indicator) to determine if the next paging slot contains a page. If the indicator is positive, the mobile must remain awake to read the next paging slot. If the indicator is negative, the mobile station returns to sleep mode until the next slot.

Mobile Initiated Call

Sends PRACH Preamble, Waits for AICH Response

Sends PRACH Message

Response on PCH To Get DPDCH/DPCCH Assignment

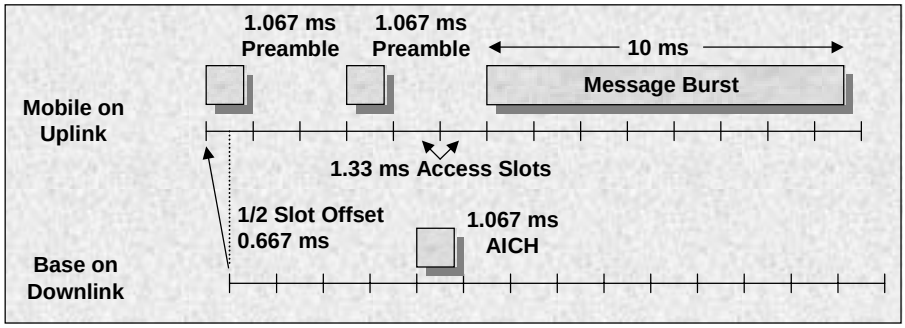

If the user decides to place a call, the mobile sends a PRACH preamble that uses the proper signature and spreading code for that base station. Depending on the access slot timing of the cell, the mobile will continue sending preambles until it detects a response from the base station on the AICH (Acquisition Indication Channel). When the base station detects a preamble that matches its designated signature and scramble code, the base station transmits the AICH. The AICH indicates to the mobile that it's PRACH was heard and that it is allowed to send the message portion of the PRACH. The mobile then transmits the message portion of the PRACH to the base station. The message part of the PRACH contains the signaling data required to establish the call. The PRACH uses the same construct of 15 slots every 20 ms as the AICH. The PRACH slots are timed to precede the PRACH slots by 1/2 slot (0.667 ms). The spacing of successive preambles, the spacing of the AICH from a preamble, and the spacing of the beginning of the last preamble to the message portion of a PRACH is set by the AICH Transmission Timing parameter:

	ΔT between preambles	ΔT Preamble to AICH	ΔT Last Preamble to Message
AICH_Transmission_Timing = 0	at least 3 slots	1.5 slots	3 slots.
AICH_Transmission_Timing = 1	at least 4 slots	2.5 slots	4 slots.

Soft Handoff

Mobile Searches for Other Cells - looks for Sync Channel

Reports Candidate Cells to System

Receives Assignment for Soft Handoff from Network

Must Determine System Frame Number from Each Cell to Properly Time Align Each Cell's Transmissions

The mobile searches for other cells by looking for the Primary and Secondary Sync channels. Once any found cells exceed a certain threshold, the mobile reports their level back to the system. The network then initiates a soft handoff if resources are available. One complication for the 3GPP system is that cells may be running with different system frame numbers (unsynchronized operation). Some mechanism is required to give the mobile knowledge of the system frame number so that data received from each base station can be correctly summed together from the rake receivers. The System Frame Number (SFN) is multiplexed with the BCH transport channel and is carried over-the-air on the P-CCPCH.

Conclusions

3GPP is a Complex, CDMA Based Wireless System

Offers Increased Capacity over GSM

Supports Packet Data up to High Rates

Will Enable a Myriad of New, Data Based Wireless Applications

As the standard evolves, the 3GPP WCDMA system will expand its capabilities including operation on the IS-41 networks used in North America. The 3GPP WCDMA system is complex and offers many new features not found in second generation or even 2.5 generation digital wireless systems. It has higher capacity than existing systems like GSM and supports true packet operation up to fairly high data rates. These capabilities will allow 3GPP WCDMA to support a myriad of new services that will continue to propel the expansion of wireless communication for years to come.